CLASSIFICATION CANCELLED
BY AUTHORITY OF CG, AMC
DATE: 25 AUG 47
Porter M. Tindall
Jno H. Ke

AN 16-40RC175-2
(Old No. AN 08-40RC175-2)

HANDBOOK OF MAINTENANCE INSTRUCTIONS

FOR

INTERPHONE EQUIPMENTS

RC-34, RC-35, RC-35-Z, RC-36, RC-36-B, RC-51, and RC-175

~~RESTRICTED~~

Published under joint authority of the United States War and Navy Departments.

CENTRAL PRESS, INC., MARION, INDIANA
JUNE, 1948 - 5000

Approved 25 NOVEMBER 1944

LIST OF REVISED PAGES ISSUED

NOTE: A heavy black vertical line to the left or in outer margin of text on revised pages, indicates the extent of the revision. This line is omitted where more than 50 percent of the page is revised. A black horizontal line to the left of page numbers listed below indicates pages revised, added or deleted by current revision. This line is used only on second and subsequent revisions.

ADDITIONAL COPIES OF THIS PUBLICATION MAY BE OBTAINED AS FOLLOWS:

AAF ACTIVITIES.—In accordance with Technical Order No. 00-5-2.

NAVY ACTIVITIES.—Submit request to nearest supply point listed below, using form NavAer-140: NAS, Alameda, Calif.; ASD, Guam; NAS, Jacksonville, Fla.; NAS, Norfolk, Va.; NASD, Oahu; NASD, Philadelphia, Pa.; ASD, Samar-Leyte; NAS, San Diego, Calif.; NAS, Seattle, Wash.

For complete listing of available material and details of distribution see Naval Aeronautics Publications Index, NavAer 00-500.

TABLE OF CONTENTS

TABLE OF CONTENTS (Continued)

PART III

INTERPHONE EQUIPMENT RC-35-Z

PART IV

INTERPHONE EQUIPMENT RC-36

PART V

INTERPHONE EQUIPMENT RC-36-B

TABLE OF CONTENTS (Continued)

PART VI
INTERPHONE EQUIPMENT RC-51

PART VII
INTERPHONE EQUIPMENT RC-175

PART VIII
APPENDIX

LIST OF ILLUSTRATIONS

Destruction of Abandoned Materiel in the Combat Zone

In case it should become necessary to prevent the capture of this equipment and when ordered to do so, DESTROY IT SO THAT NO PART OF IT CAN BE SALVAGED, RECOGNIZED, OR USED BY THE ENEMY. BURN ALL PAPERS AND BOOKS.

Means:—

1. Explosives, when provided.
2. Hammers, axes, sledges, machetes, or whatever heavy object is readily available.
3. Burning by means of incendiaries such as gasoline, oil, paper, or wood.
4. Grenades and shots from available arms.
5. Burying all debris or disposing of it in streams or other bodies of water, where possible and when time permits.

Procedure:—

1. Obliterate all identifying marks. Destroy nameplates and circuit labels.
2. Demolish all panels, castings, switch- and instrument-boards.
3. Destroy all controls, switches, relays, connections, and meters.
4. Rip out all wiring and cut interconnections of electrical equipment. Smash gas, oil, and water-cooling systems in gas-engine generators, etc.
5. Smash every electrical or mechanical part, whether rotating, moving, or fixed.
6. Break up all operating instruments such as keys, phones, microphones, etc.
7. Destroy all classes of carrying cases, straps, containers, etc.
8. Bury or scatter all debris.

DESTROY EVERYTHING!

★

Unsatisfactory Report

For U. S. Army Air Force Personnel:

In the event of malfunctioning, unsatisfactory design, or unsatisfactory installation of any of the component units of this equipment, or if the material contained in this book is considered inadequate or erroneous, an Unsatisfactory Report, AAF Form No. 54, or a report in similar form, shall be submitted in accordance with the provisions of Army Air Force Regulations No. 15-54, listing:

1. Station and organization.
2. Nameplate data (type number or complete nomenclature if nameplate is not attached to the equipment).
3. Date and nature of failure.
4. Radio model and serial number.
5. Remedy used or proposed to prevent recurrence.
6. Handbook errors or inadequacies, if applicable.

For U. S. Navy Personnel:

Report of failure of any part of this equipment during its guaranteed life shall be made on Form N. Aer. 4112, "Report of Unsatisfactory or Defective Material," or a report in similar form, and forwarded in accordance with the latest instruction of the Bureau of Aeronautics. In addition to other distribution required, one copy shall be furnished to the inspector of Naval Materiel (location to be specified) and the Bureau of Ships. Such reports of failure shall include:

1. Reporting activity.
2. Nameplate data.
3. Date placed in service.
4. Part which failed.
5. Nature and cause of failure.
6. Replacement needed (yes—no).
7. Remedy used or proposed to prevent recurrence.

For British Personnel:

Form 1022 procedure shall be used when reporting failure of radio equipment.

SPECIAL NOTICE

This handbook is divided into eight parts and each part is divided into from one to five sections. Pages and figures of each part are numbered according to the part of the book in which they appear and to their order within that part. For ease in cross-reference, the part, the section, and the paragraph number will be carried on each page.

PART I

INTERPHONE EQUIPMENT RC-34

SECTION I

GENERAL DESCRIPTION

1. GENERAL.

a. Interphone Equipment RC-34 is a two-place interphone system for use in training and tactical aircraft. It provides interphone communication between the two positions in the airplane, and switching facilities for partial control of one radio set.

b. Interphone Amplifier BC-347-C or BC-347-A "Modified," used with this equipment, operates from a 24 to 28 volt d-c primary power source, and requires a 250 volt d-c plate voltage. This plate voltage may be obtained from Dynamotor Unit PE-86-( ) or from the high voltage power supply of a radio set in the airplane capable of providing 200 to 300 volts d-c at 18 milliamperes. Either of these interphone amplifiers requires 0.7 amperes at 28 volts d-c and 18 milliamperes at 250 volts d-c; a total power of 24 watts.

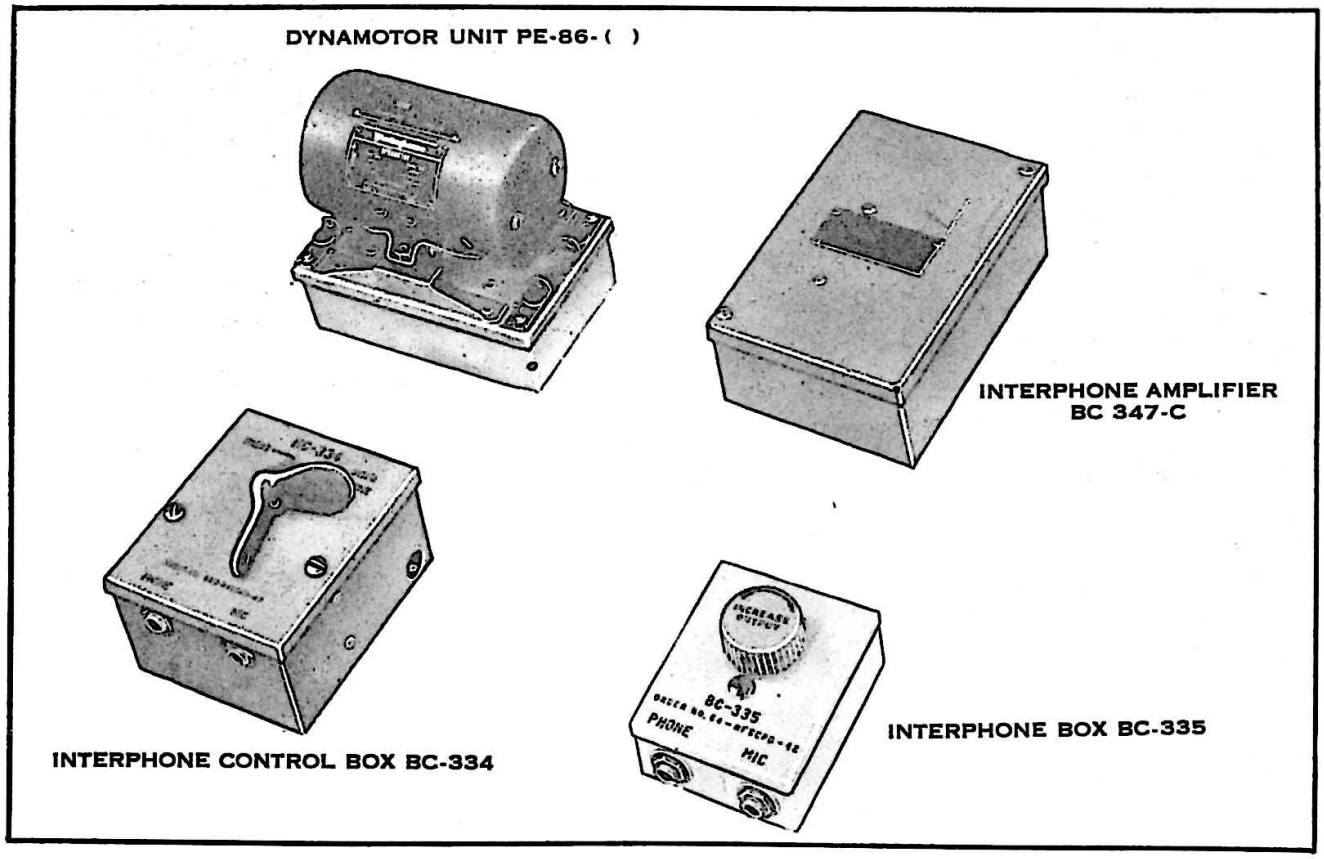

Figure 1-1. Interphone Equipment RC-34—Major Assemblies

2. EQUIPMENT REQUIRED.

Interphone Equipment RC-34 consists of the following parts:

Quantity	*Name of Part*	*Overall Dimensions (inches)*	*Weight (pounds)*
1	Interphone Amplifier BC-347-A or BC-347-C "Modified" including one Tube JAN.-6F8-G (VT-99) installed in socket.	5⅞ x 4 x 2⅜	1.50
‖	Mounting FT-486	6½ x 3¾ x 1⅛	1.89
1	Interphone Control Box BC-334 (Master)	3⅞ x 3⅜ x 3½	.82
1	Interphone Box BC-335 (Remote)	3⅜ x 2¾ x 2	.32
1	Dynamotor Unit PE-86-(*)	5¼ x 3½ x 5	3.6
2†	Cord CD-307-A (Headset Extension)*		
2†	Microphone T-17		.88
2†	Headset HS-33		0.7
	or		
	Headset HS-38 (For Flyer's Helmet)		0.5
2†	Headset Adapter MC-385-( )‡		0.25

(*) Any production of the dynamotor unit (PE-86-A through PE-86-S) may be used.

* The exact length of Cord CD-307-A depends on the individual installation.

† The quantity required depends upon the installation plan of the airplane.

‡ Headset Adapter. MC-385-C or -D only must be used at the pilot's station where Filter Equipment RC-198 is installed. A headset adapter with any suffix letter (-A, -B, -C, -D) may be used at other stations.

§ These items may be supplied as part of Interphone Equipment RC-34, as part of the radio sets with which they are used, or separately.

‖ Mounting FT-486 must be used with Interphone Amplifier BC-347-C or BC-347-A "Modified" in all AT-6 and BT-13 aircraft.

The following may be substituted for Microphone T-17:

a. MICROPHONE T-17-B, T-17-D, or T-17-E.

b. MICROPHONE ANB-M-C1 IN AN OXYGEN MASK, with one or another of the microphone cords listed in "d", below.

c. MICROPHONE T-30-P, -Q, -R, -S, -U, or -V, with one or another of the microphone cords listed in "d", below.

d. CORD. The exact type of cord to be used depends upon the installation plan of the airplane.

(1) CORD CD-508 or CD-508-A. These cords include a Switch SW-141-( ) which provides "ON-OFF" control of the send-receive relay of the radio sets associated with this interphone equipment, and provides for the opening and closing of the microphone circuit.

(2) A FABRICATED MICROPHONE EXTENSION CORD, including a suitable control switch (such as Microphone Switch SA-26/U) supplied as a part of the airplane. The fabricated cord requires a Jack JK-48 and a length of Cordage CO-219, and may also include a Plug PL-68 and a length of Cordage CO-122-A or -B.

3. DESCRIPTION OF MAJOR ASSEMBLIES.

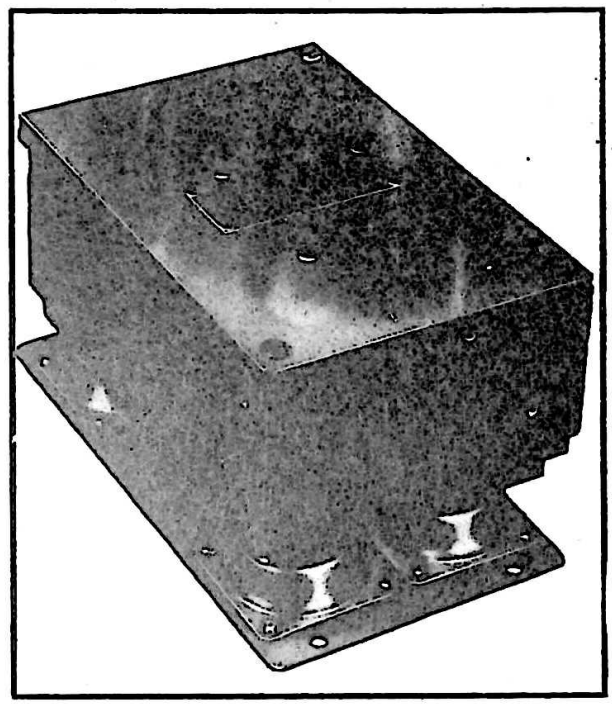

Figure 1-2. Interphone Amplifier BC-347-C with Mounting FT-486—Exterior View

a. INTERPHONE AMPLIFIER BC-347-C or INTERPHONE AMPLIFIER BC-347-A "MODIFIED."—These interphone amplifiers consist of a single stage, push-pull, audio amplifier contained in an aluminum box approximately 5⅞" x 4" x 2⅜". The amplifier components are mounted on the cover. A plug terminal strip on the cover connects to a jack terminal strip on the box. External wiring is connected to terminals on the jack terminal strip.

b. DYNAMOTOR UNIT PE-86-( ).—The dynamotor unit consists of a dynamotor, two filter capacitors, and a jack terminal strip mounted on the cover of a small aluminum box. The box contains a plug terminal strip to which the external connections are made. The approximate size of the dynamotor unit is 5¼" x 3½" x 5".

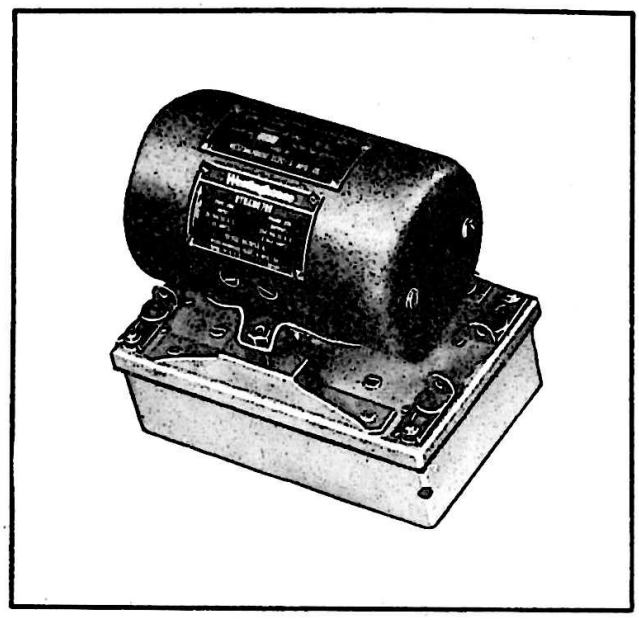

Figure 1-3. Dynamotor Unit PE-86( )—Exterior View

c. INTERPHONE CONTROL BOX BC-334.—The interphone control box consists of a two position switch, a microphone jack (Jack JK-33-A), a phone jack (Jack JK-34-A), and a plug terminal plate mounted on the cover of a small aluminum box. The assembly plugs into a jack terminal plate mounted in the bottom of the box. External wires are connected to terminals riveted to the jack terminal plate. The approximate size of the interphone control box is 3⅞" x 3⅜" x 3¼".

d. INTERPHONE BOX BC-335.—This interphone box consists of a volume control mounted on the cover of a small aluminum box. A microphone jack and phone jack are assembled to the box portion. The approximate size is 3⅜" x 2¾" x 2".

4. INTERCHANGEABILITY OF MAJOR ASSEMBLIES.

a. Interphone Amplifier BC-347-A "Modified" is interchangeable with Interphone Amplifier BC-347-C.

b. All Dynamotor Units PE-86-( ) are interchangeable.

c. The following microphones are interchangeable with Microphone T-17.

(1) Microphone T-17-B, T-17-D or T-17-E.

(2) Microphone ANB-M-C1 used with a suitable microphone extension cord.

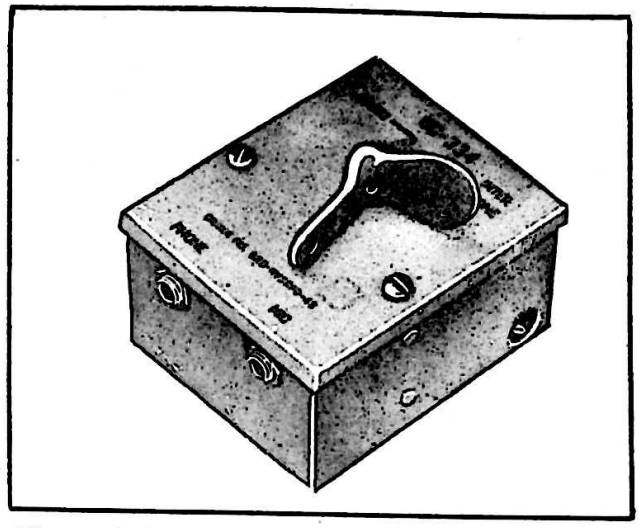

Figure 1-4. Interphone Control Box BC-334—Exterior View

(3) Microphone T-30-P, -Q, -R, -S, -U or -V used with a suitable microphone extension cord.

d. Headset Adapter MC-385-B is interchangeable with Headset Adapter MC-385-A, Headset Adapter MC-385-D is interchangeable with Headset Adapter MC-385-C.

e. Switches SW-141-A to SW-141-AB are interchangeable.

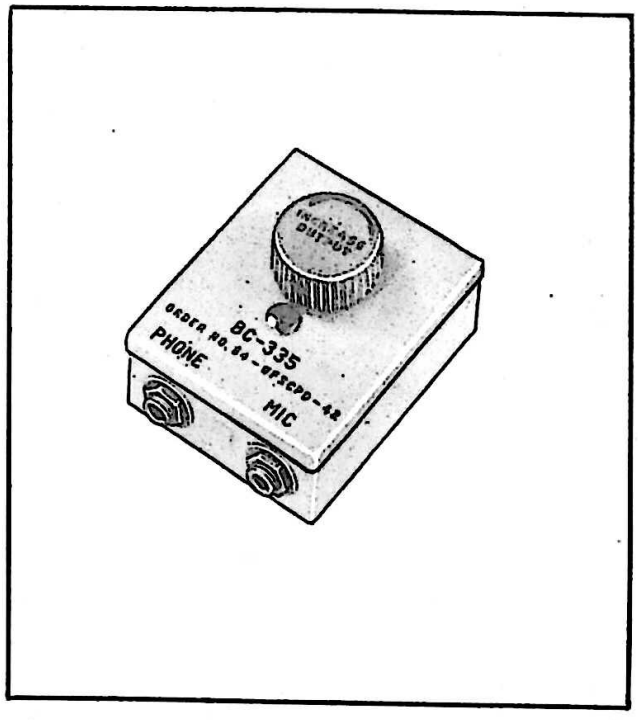

Figure 1-5. Interphone Box BC-335—Exterior View

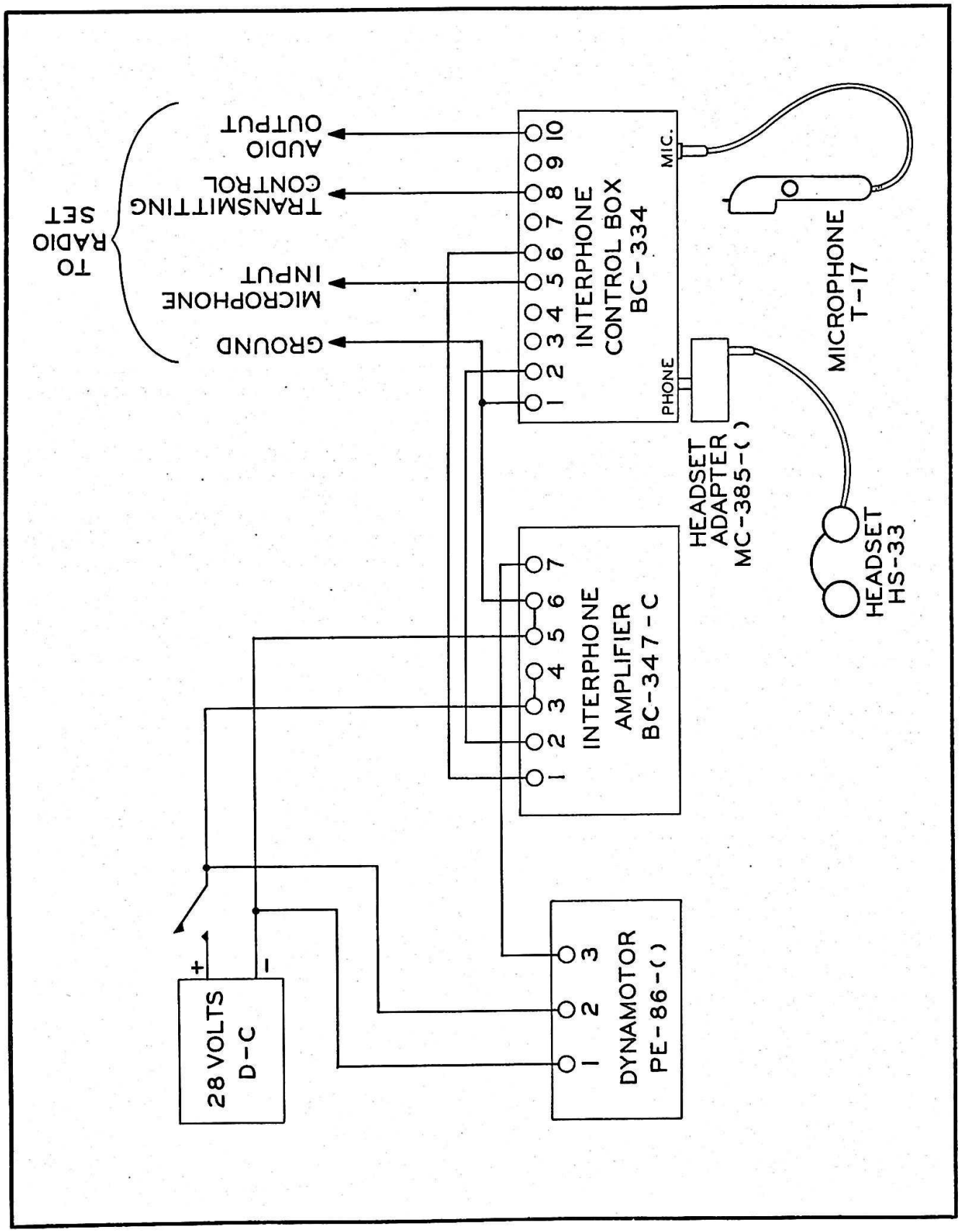

Figure 1-6. Bench Check Interconnection Diagram

SECTION II
INSTALLATION AND ADJUSTMENT

1. PRE-INSTALLATION BENCH TESTS.

a. The interphone amplifier and dynamotor should be given a pre-installation bench test as follows:

(1) Connect the amplifier and dynamotor in the test circuit shown in figure. 1-6.

(2) Turn on the power, place Switch S in position M, close the microphone switch, and speak into microphone T-17. An accurate reproduction of the speaker's voice should be heard in the headset.

b. The interphone station boxes should be given a pre-installation bench check as follows:

(1) Place the interphone boxes in a test mock-up, similar to the aircraft installation in which they are to be used, and check for proper operation.

(2) The interphone boxes may be tested for continuity and shorts in a continuity test circuit using lights and switches, which will provide a test equivalent to an operational check, in lieu of a bench mock-up of the airplane interphone system.

2. INSTALLATION.

a. PREPARATION FOR INSTALLATION. — Each box must be prepared for installation by punching or drilling the necessary holes for mounting and wiring the equipment. Care should be taken to place the various holes so that the interconnecting wires, grommets, and mounting screws will not interfere with the jack terminal plates or strips, wiring or internal components of the cover assemblies, or the assembly of the covers to the boxes. Mounting holes and holes for interconnecting wiring should be located in accordance with data given on the applicable Air Force drawing. If Mounting FT-486 is required (see fig. 1-7) assemble the amplifier to the mounting as follows:

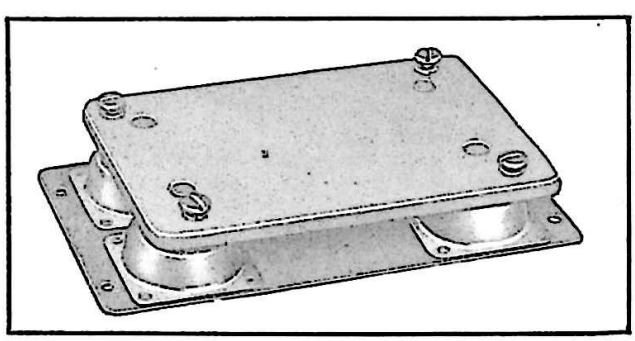

Figure 1-7. Mounting FT-486—Diagonal View

(1) Glue the template (furnished with the mounting) to the bottom of the amplifier box in accordance with the instructions on the template.

(2) Drill the four No. 2 holes in the bottom of the amplifier box.

(3) Assemble the amplifier to the mounting using the No. 10 binding head screws and lockwashers furnished with the mounting. The base plate for the mounting is already drilled for installation, and no additional preparation is required.

b. LOCATION OF MAJOR ASSEMBLIES.—Install Interphone Control Box BC-334 in the pilot's cockpit in a location accessible to the user. Install Interphone Box BC-335 in the other cockpit in a location accessible to the user. Install the interphone amplifier and the dynamotor in an accessible location, so that the leads to the interphone boxes will be as short as it is convenient to make them.

c. WIRING.—After the interphone amplifier, interphone boxes and dynamotor have been mounted in the proper locations in the airplane, interconnect them with Air Force wire (Specification AN-J-C-48) in compliance with Specification AN-W-14. Wire the circuits in accordance with standard Air Force drawings. The amplifier and Interphone Control Box BC-334 have jack strips, mounted on the bottom of the boxes, with solder terminals on the under side to which the conductors are connected. Enough slack must be left in the leads for Interphone Box BC-335 to allow for removal of the cover. It is desirable to turn the volume control unit in Interphone Box BC-335 so that the terminals are toward the side of the box opposite that which the interconnecting wires enter. If audio howl or feedback occurs under any condition, shield all the microphone leads. Figure 1-8 shows a diagram for a typical installation.

d. POWER SUPPLY FOR INTERPHONE AMPLIFIER.—The interphone amplifier requires a high voltage power supply of 250 volts at 18 milliamperes. This power may be obtained from one of the following sources:

(1) Radio Set SCR-( )-283 (if installed in the airplane).—If the high voltage is obtained from the dynamotor unit of this radio set, a suitable dropping resistor (8000 ohms, 10 watts), such as Resistor RS-250, must be used to reduce the voltage output of this dynamotor to approximately 250 volts, the proper value for operation of the interphone amplifier.

(2) Dynamotor PE-86-( ).—Normally supplied as a part of this equipment when radio sets other than Radio Set SCR-( )-283 are installed in the airplane.

(3) The power supply unit of any other radio set in the airplane capable of furnishing 225-300 volts at 18 milliamperes. If the voltage of the power supply used

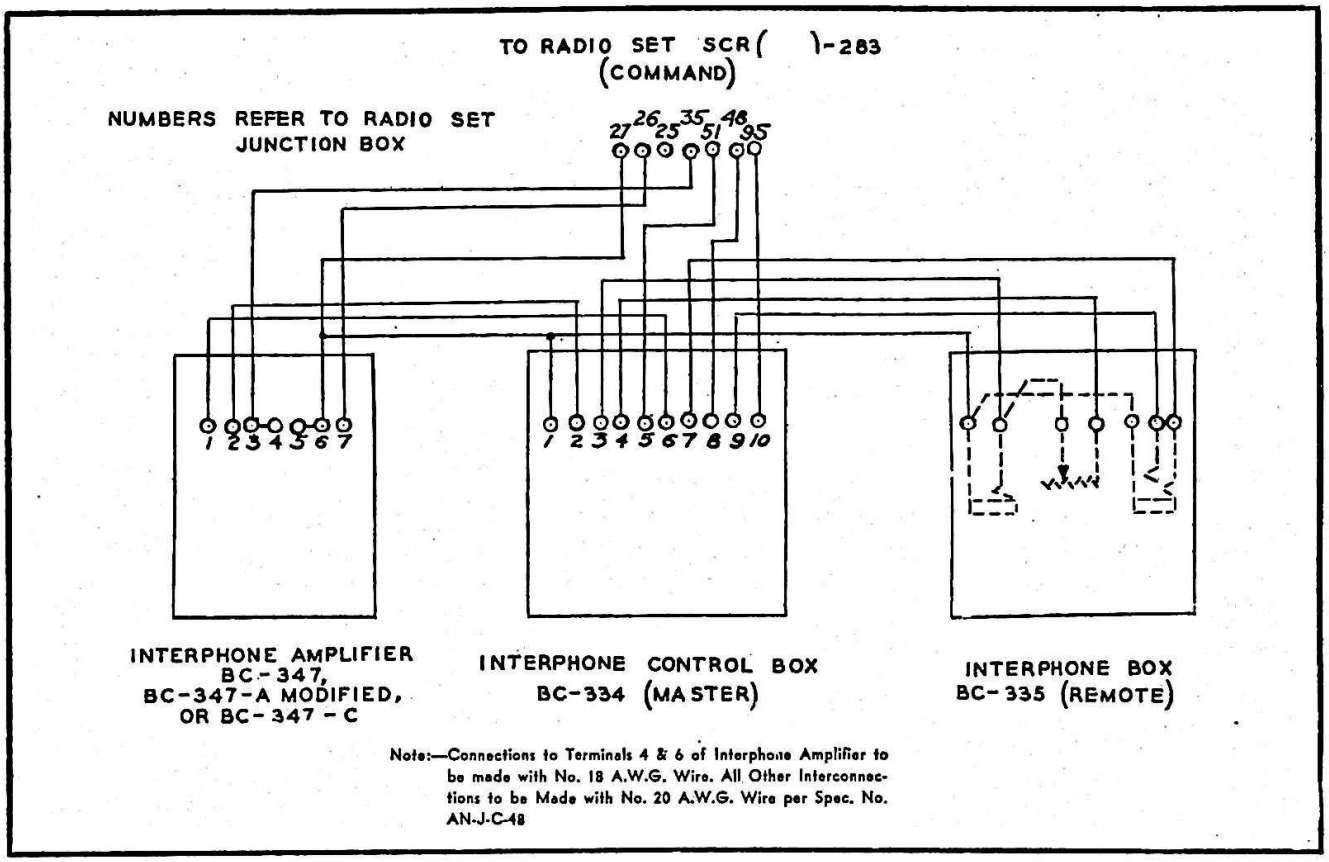

Figure 1-8. Interphone Equipment RC-34—Typical Installation, Interconnection Diagram

is more than 300 volts, a suitable resistor should be added in series with the high voltage supply lead.

3. ADJUSTMENT OF OUTPUT TAP (INTERPHONE AMPLIFIER).

The interphone amplifiers are normally supplied with the output connected for high impedance operation. However, check the amplifiers and make certain that the lead from terminal 2 of the plug terminal strip is connected to the "H" (high impedance) tap of the output transformer.

4. AFTER-INSTALLATION CHECK.

Turn on the interphone equipment and the radio set associated therewith and check each function of the equipment to make certain that it operates as detailed in section III of part I.

SECTION III
OPERATION

1. STARTING AND STOPPING EQUIPMENT.

a. STARTING.

(1) WHEN USED WITH RADIO SET SCR-( )-283.—If the interphone equipment is used in conjunction with Radio Set SCR-( )-283, and the high voltage power for the interphone amplifier is derived from the dynamotor unit of this set, the interphone equipment may be started by turning on the main battery switch, and turning the "AUTO-OFF-MANUAL" switch on Radio Control Box BC-( )-231 to either the "AUTO" or "MANUAL" position.

(2) WHEN USING DYNAMOTOR UNIT PE-86-( ).—When the high voltage power for the interphone amplifier is supplied from Dynamotor Unit PE-86-( ), the interphone equipment is started by turning on the main battery switch.

b. STOPPING.—The interphone equipment may be stopped by turning off the main battery switch or by turning off the "AUTO-OFF-MANUAL" switch on Radio Control Box BC-( )-231 of Radio Set SCR-( )-283 if the high voltage power supply for the interphone amplifier is derived from the dynamotor unit of this set.

2. OPERATING THE INTERPHONE EQUIPMENT.

When the interphone system and the radio set used therewith are properly installed, connected, and operating, operation of the various facilities may be obtained in the following manner:

a. INTERPHONE.

To use the interphone circuit, proceed as follows:

(1) Place the selector switch on Interphone Control Box BC-334 in the "INTERPHONE" position. This connects both microphones and both headsets to the interphone amplifier (See fig. 1-9.)

(2) Close either microphone switch and speak into the associated microphone. An accurate reproduction of the speaker's voice will be heard in each headset.

(3) The volume control on Interphone Box BC-335 is not effective on the interphone circuit.

b. RADIO.

To use the radio facility proceed as follows:

(1) Place the selector switch on Interphone Control Box BC-334 in the "RADIO" position. This connects both microphones and both headsets to the radio set. (See Fig. 1-9.) The output of the radio receiver will be heard in each headset.

(2) Since a volume control is not provided on Interphone Control Box BC-334, the pilot controls the output level in both headsets by means of the radio receiver volume control. It is possible to reduce the output level at the remote position by means of the control on Interphone Box BC-335.

(3) Close either microphone switch and speak into the asssociated microphone. The transmitter will be modulated and the voice output of the sidetone circuit will be heard in the headset, provided that the "VOICE-CW-TONE" switch on the transmitter control box is in the "VOICE" position.

IMPORTANT

In order to insure satisfactory operation of this equipment, do not close more than one microphone switch at a time.

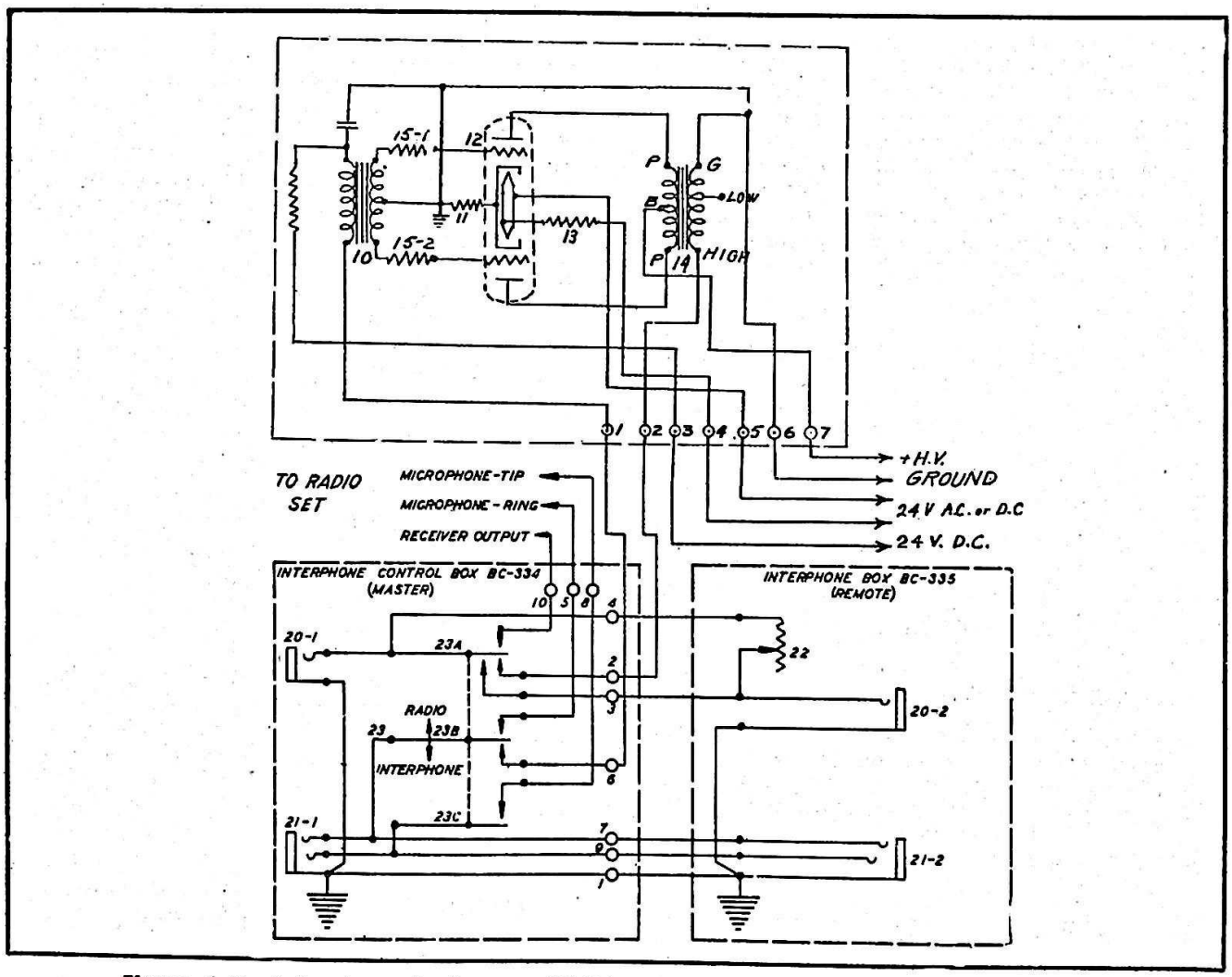

Figure 1-9. Interphone Equipment RC-34—Typical Installation, Schematic Diagram

SECTION IV
THEORY OF OPERATION

1. GENERAL.

Interphone Amplifier BC-347-C is a single stage, push-pull audio amplifier utilizing one Tube JAN-6F8G (VT-99). The input circuit is designed for use with standard carbon microphones such as Microphone T-17, T-30-( ) or ANB-M-C1. The output circuit supplies sufficient power to operate (in parallel) as many as ten Headsets HS-33 or HS-38, each with an associated Headset Adapter MC-385-( ).

2. THEORY OF OPERATION.

a. INTERPHONE AMPLIFIER BC-347-C.—(See figure 1-10.) Primary power for the amplifier tube filaments and the microphone is obtained from the aircraft battery through the main battery switch and enters the amplifier on terminals 3 and 4 of the jack terminal strip. A 35-ohm series resistor 13 drops the 28 volt d-c line voltage to the 6.3 volts required for the filaments of tube JAN-6F8G. (VT-99). High voltage power for the tube is obtained from Dynamotor Unit PE-86-( ) or the dynamotor unit of a radio set associated with the interphone equipment, and enters the amplifier through terminal 7 of the jack terminal strip. Current for the microphone is obtained from the 28 volt d-c line at terminal 3 of the plug terminal strip through the 350-ohm resistor (8). The 50 microfarad electrolytic capacitor (9) in conjunction with 350 ohm resistor (8) filters the audio noise in the d-c line, from the microphone circuits. The 450-ohm resistor 11 provides self-bias for the tube. With a microphone connected to the input of the amplifier (between terminal 1 and terminal 6 of the jack terminal strip), the microphone switch closed, and the microphone spoken into, the variation in the resistance of the microphone, resulting from speech, causes a variation in current through the primary of the input transformer 10, which develops a varying current across this winding. The input transformer couples the a-c voltage developed across its primary to the grids of the tube. This voltage is amplified by the tube and developed across the primary of the output transformer 14. The output transformer couples the output to the headset load. The 350,000-ohm resistors 15 connected in series with each grid, reduce the output of the amplifier at frequencies above 4000 cycles and also reduces any tendency toward oscillation.

b. INTERPHONE AMPLIFIER BC-347-A "MODIFIED." (See figure 1-11).—Interphone Amplifier BC-347-A "Modified" is similar to Interphone Amplifier BC-347-C (See Fig. 1-10) except that the turns ratio of the transformers are different and a grid resistor network, consisting of two 2-megohm resistors 15 and two 750,000-ohm resistors 16, is used in place of the 350,000-ohm resistors 15 employed in Interphone Amplifier BC-347-C.

SECTION V
MAINTENANCE

IMPORTANT

Periodic inspections prescribed herein represent minimum requirements. If because of local conditions, peculiarities of equipment, or abnormal usage they are found insufficient to assure satisfactory operation of the equipment, local authorities should not hesitate to increase their scope or frequency.

1. PERIODIC INSPECTION.

a. PRE-FLIGHT OPERATIONAL CHECK.—Turn on the interphone equipment and the associated radio sets. Check for operation of each facility at each interphone box (refer to section III). Thoroughly investigate any malfunctioning found in this check or any reported by the airplane crew and take necessary corrective action.

b. 25-HOUR CHECK (INTERPHONE AMPLIFIER).—After approximately each 25 hours of flight, remove the interphone amplifier from its case for inspection. Examine each part for any effects of overheating, vibration or moisture, and for other damage. Remove the tube from its socket (see fig. 1-12) and examine the elements closely for possible defects caused by vibration. Replace defective tubes. If any other parts are defective, replace the amplifier. Return the defective amplifier to the proper organization for repair.

c. 50-HOUR CHECK.

(1) INTERPHONE AMPLIFIER.—Check the interphone amplifier as detailed in paragraph *b* above.

(2) DYNAMOTOR.—Remove the dynamotor unit from the base and inspect the filter capacitors and

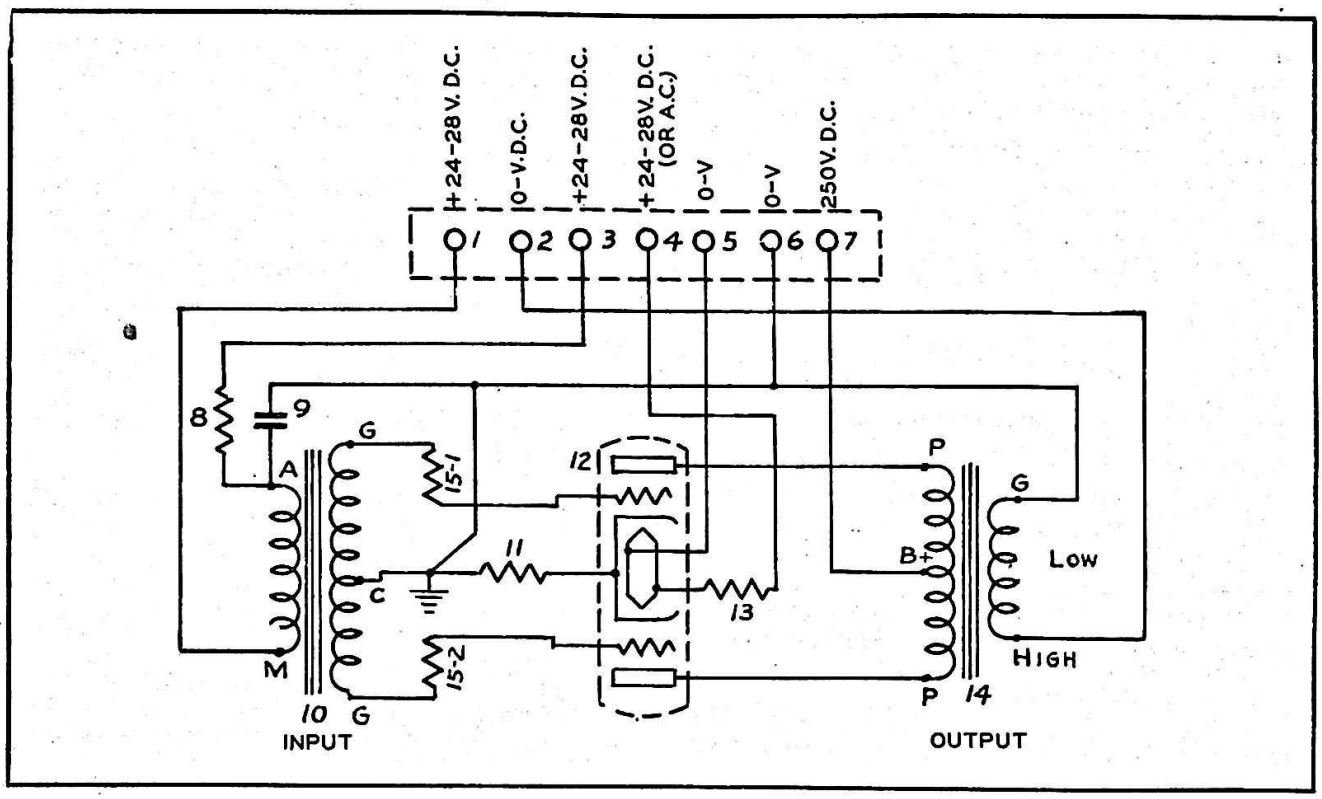

Figure 1-10. Interphone Amplifier BC-347-C—Schematic Circuit Diagram

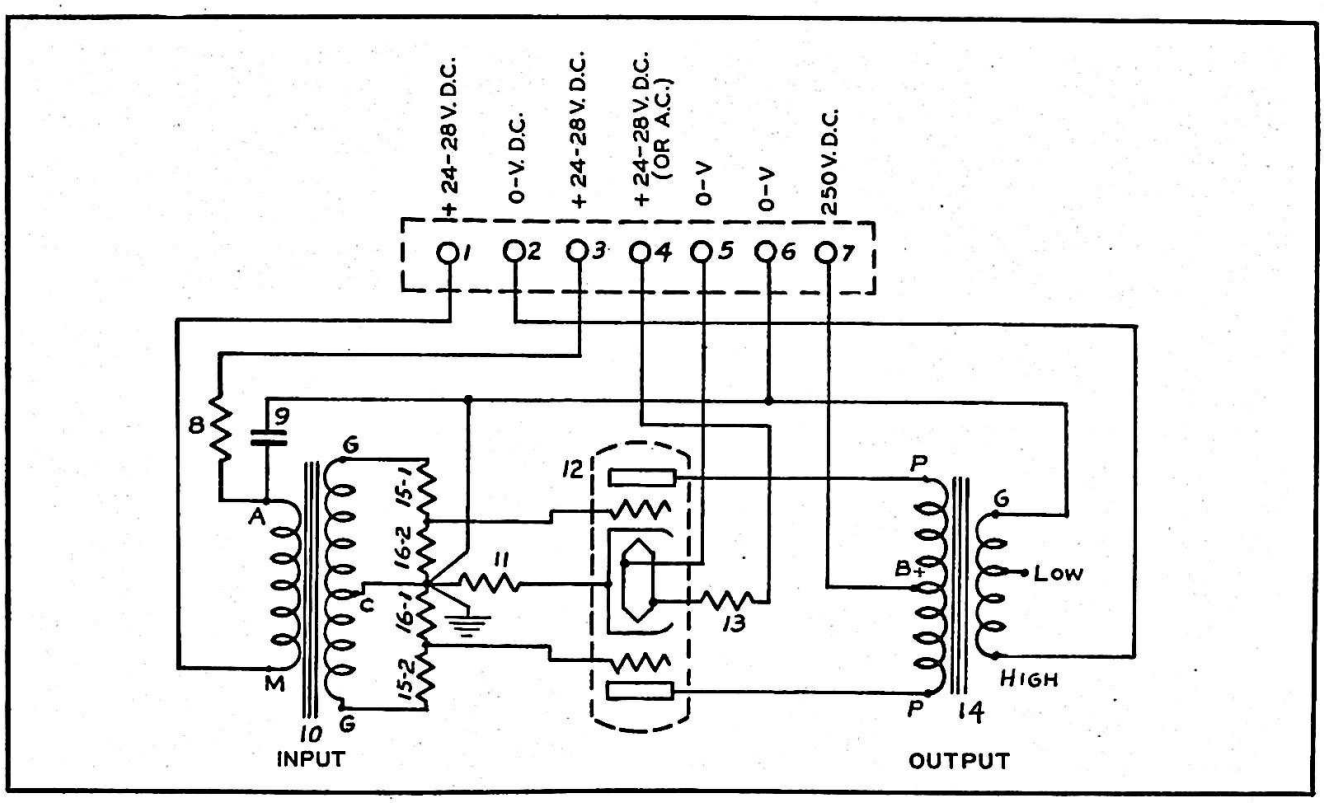

Figure 1-11. Interphone Amplifier BC-347-A "Modified"—Schematic Circuit Diagram

terminal boards for any effects of overheating, vibration, moisture, etc. If any parts are defective, replace the unit with one known to be good, and return the defective dynamotor to the proper agency for repair.

(3) INTERPHONE BOXES.—Remove the cover portion and inspect the interior of the interphone boxes for damage from moisture, vibration or other causes, In particular, note whether the microphone jack (JK-33-A) is corroded. If any parts are defective, replace the unit with one known to be good, and return the defective item to proper agency for repair.

(4) OTHER PARTS. — Examine the various switches, plugs, jacks, cordage, etc. (See Figs. 1-13 and 1-14), and repair or replace defective items.

d. 250-HOUR CHECK (DYNAMOTOR). — After every 250 hours of operation inspect the dynamotor as follows:

(1) Remove the end covers and inspect the commutators, brushes, etc., for any signs of excessive wear, or damage. A highly polished commutator surface is desirable and a dark color should not be mistaken for a burned condition. If the surface is smooth and polished and the commutation satisfactory, the commutator should be left alone. Slight sparking is not necessarily evidence of poor commutation. If the surface of the commutator becomes dirty, wipe it with a clean cloth. If necessary, clean with a cloth moistened with cleaning fluid (petroleum spirits, kerosene or gasoline).

(2) Replace brushes when they have worn to 3/16" or less in length. When brushes have been replaced, operate the dynamotor for at least 10 hours at no load, or preferably a light load (approximately 15 milliamperes) prior to placing it in service use. This procedure is necessary in order to properly form the brushes to the curvature of the commutator. If this precaution is not observed, excessive noise may be produced in the interphone system.

NOTE

Care must be taken to make certain that all brushes are replaced in the proper plus or minus brush holder, with the side on which the polarity is marked, facing up. The polarity of the brush holder is marked on the end bracket. Replacement brushes not marked with the polarity, should be properly marked at the time of installation.

(3) Clean out all dirt and carbon and copper dust from the end covers and interior of the machine.

(4) Check to make certain that the brushes are free in the brush holders.

2. LUBRICATION.

a. After every 1000 hours of operation (or approximately every six months), remove the dynamotor from the airplane, and lubricate the bearings with a small amount of grease AN-G-5, ANDOK "C" or equivalent.

b. After each year of operation, clean the bearings and repack with approximately a 3/16" cube of grease AN-G-5, ANDOK "C" or equivalent.

3. TROUBLE SHOOTING.

a. A careful visual inspection of the components and wiring of the defective equipment may, in many cases, lead to the discovery of a faulty part. Check resistors, transformers and wiring for charred surfaces, leakage

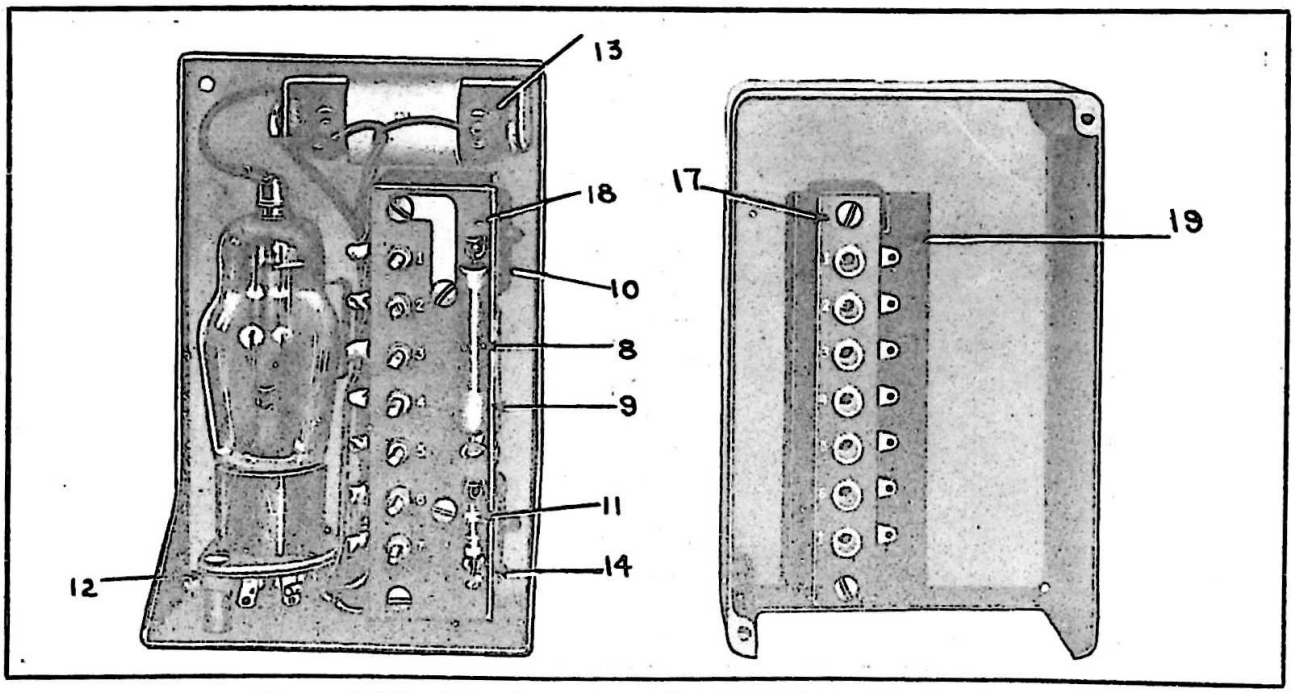

Figure 1-12. Interphone Amplifier BC-347-C—Interior View

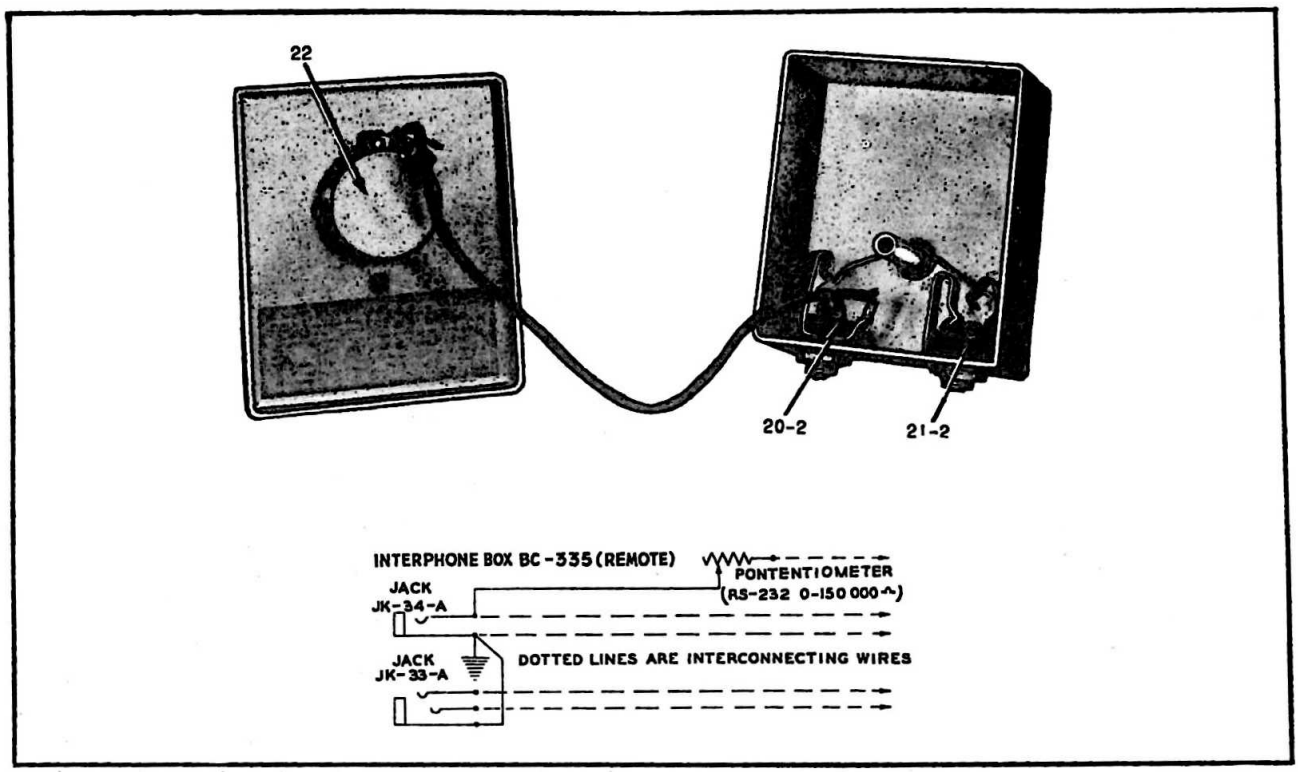

Figure 1-13. Interphone Box BC-335—Interior View and Schematic Diagram

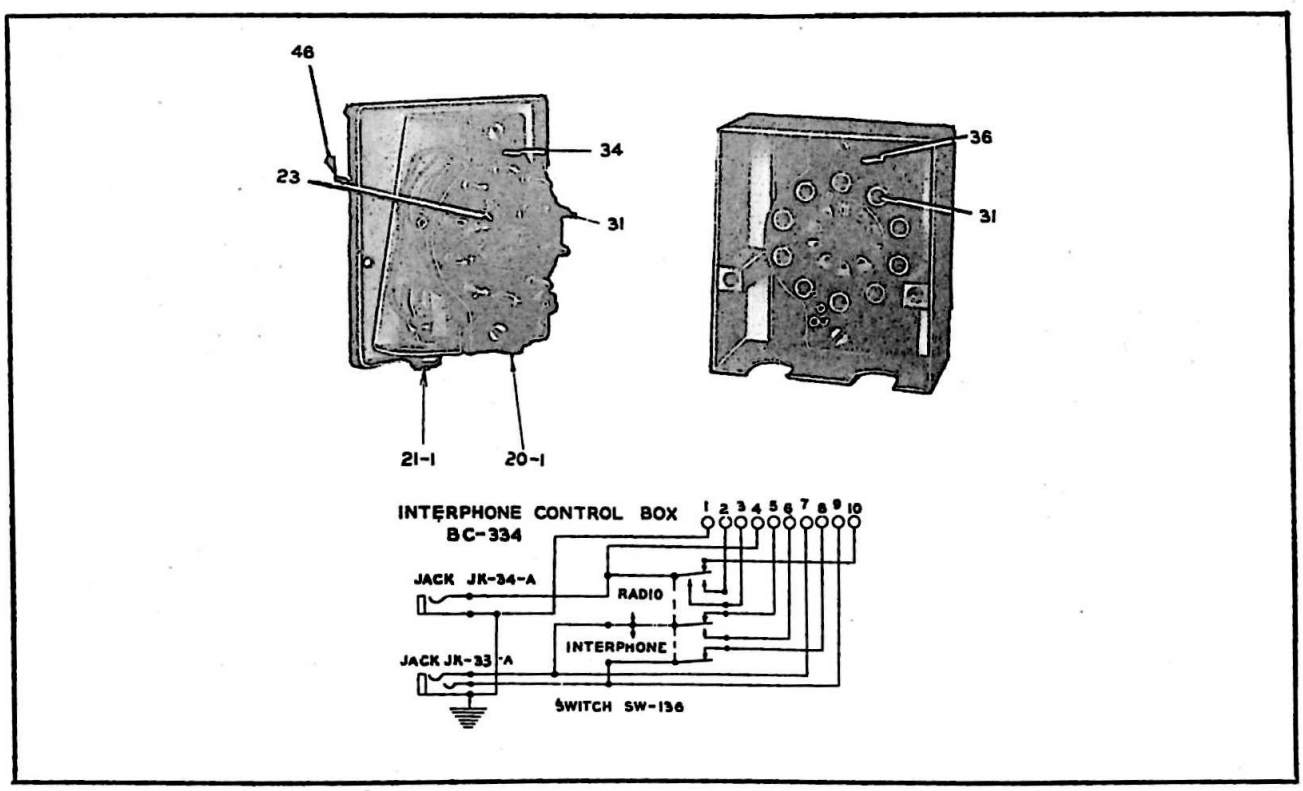

Figure 1-14. Interphone Control Box BC-334—Interior View and Schematic Diagram

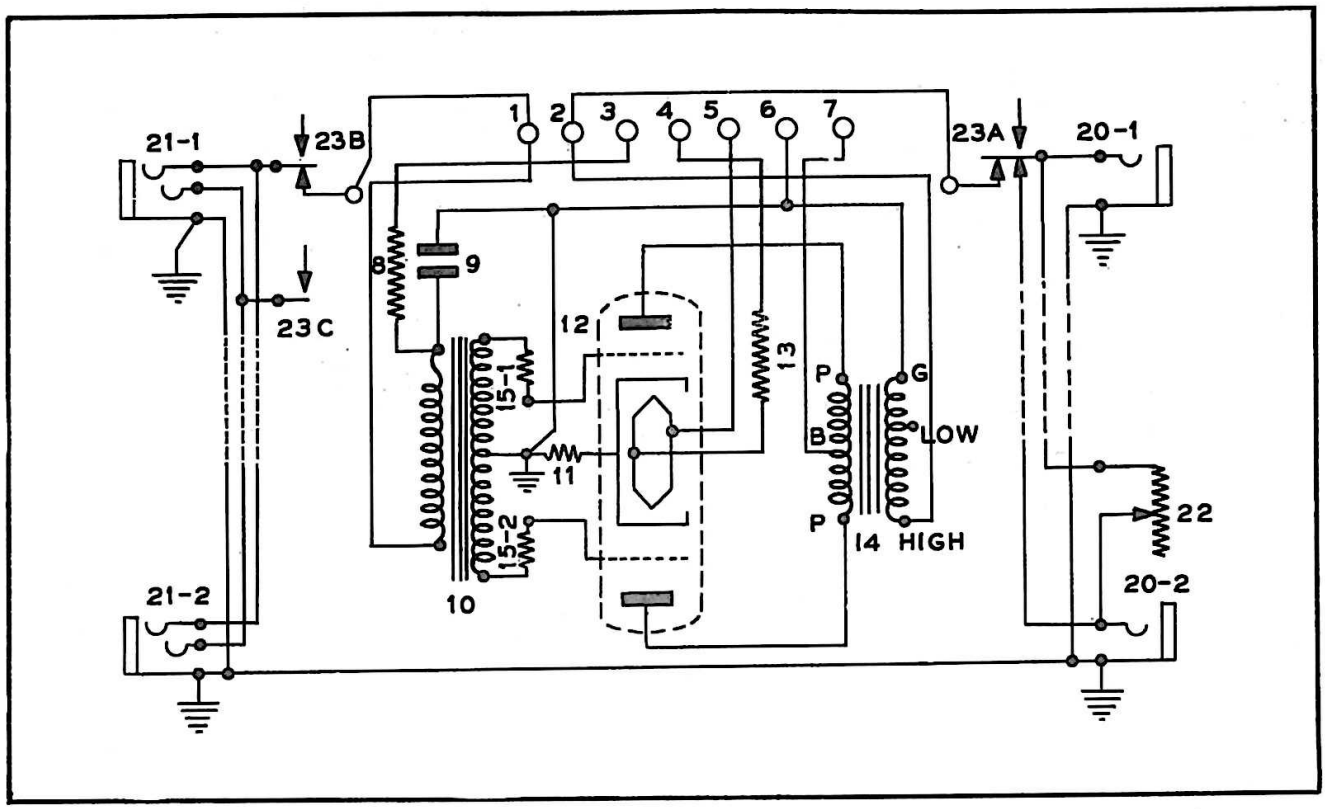

Figure 1-15. Interphone Equipment RC-34—Functional Diagram of Amplifier Circuit

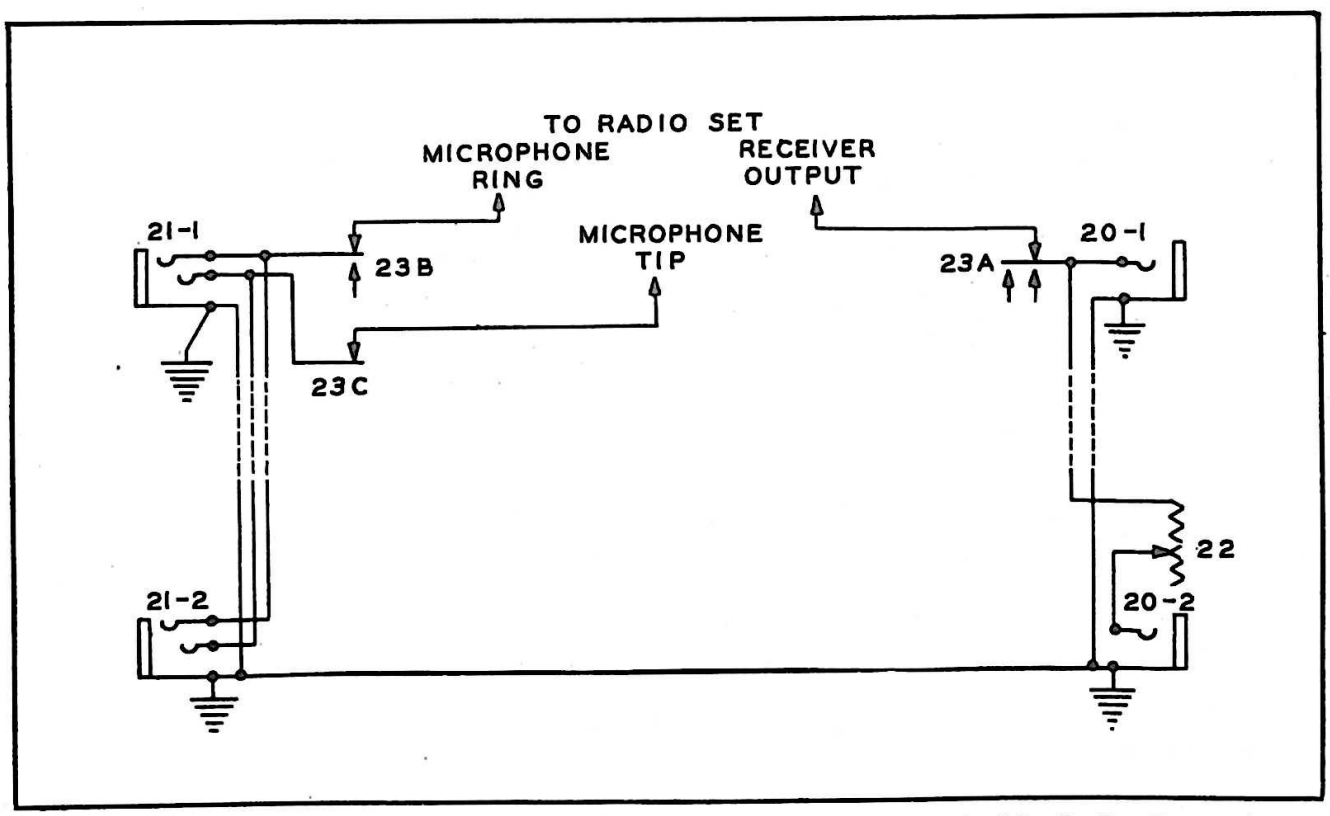

Figure 1-16. Interphone Equipment RC-34—Functional Diagram of Typical Radio Set Connections

of compound or discoloration that might indicate excessive current conditions.

b. If a visual inspection of the interphone amplifier does not disclose a defective part, check the vacuum tube (Tube JAN-6F8G) since it is often the cause of faulty operation. Test the tube in a suitable tube-checker, or substitute in its place a tube known to be good.

c. The trouble and remedy chart, figure 1-17, indicates some of the possible faults in the interphone amplifier and dynamotor unit, and the probable causes.

4. VACUUM TUBES.

a. DISCARDING VACUUM TUBES—Remove and discard Tubes JAN-6F8G (VT-99) when the mica supporting the elements shows any signs of wear or when the tubes test unsatisfactory in a standard tube-checker. Interphone amplifiers which are noisy in flight but quiet on the ground generally will be found to contain tubes which have become defective due to vibration. Replace such tubes.

b. TUBE POTENTIALS.—The filament voltage of Tube JAN-6F8G (VT-99) should not vary by more than 15% from 6.3 volts, and the plate voltage should not, normally, exceed 275 volts. Voltages greater than 275 volts on the plates or voltages greater than 7.25 or less than 5.4 volts on the filaments will materially reduce the life of the tube.

5. TYPICAL RESISTANCE MEASUREMENTS.

The following resistance measurements should be obtained between the indicated terminals of the plug terminal strip of the interphone amplifier: Major departures from these values indicate a fault or deficiency in the amplifier.

From	*To*	*Resistance*	*Remarks*
Terminal No. 1	Terminal No. 3	360 Ohms, Approx.	May vary between 14 and 30 ohms. With tube in socket.
Terminal No. 2	Terminal No. 6	23 Ohms, Approx.	
Terminal No. 4	Terminal No. 5	40 Ohms, Approx. open	
Terminal No. 7	Terminal No. 6		

6. TYPICAL FUNCTIONAL DIAGRAMS.

Figures 1-15 and 1-16 contain information useful in trouble shooting.

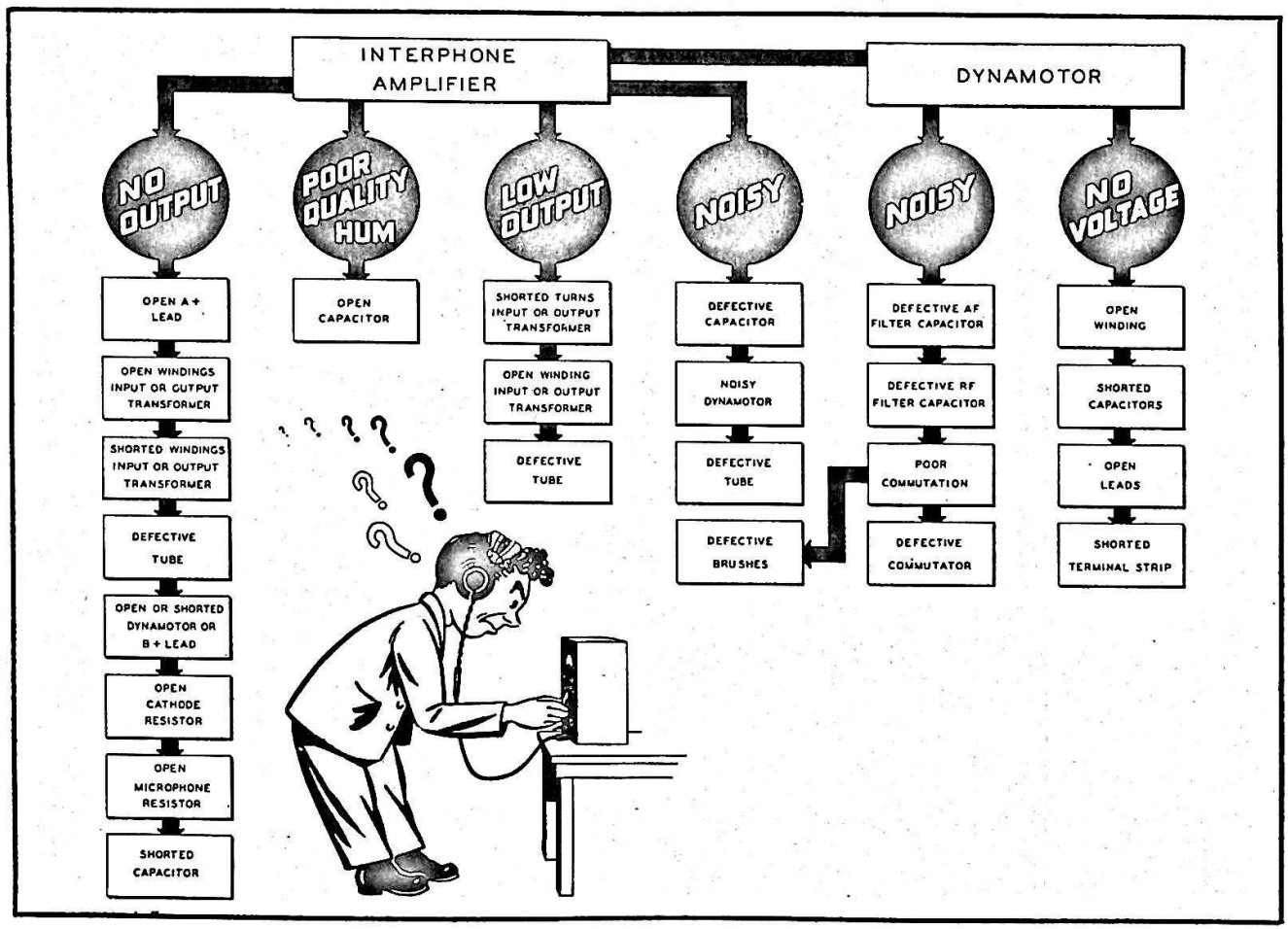

Figure 1-17. Interphone Equipment Trouble-Shooting Chart

PART II

INTERPHONE EQUIPMENT RC-35

SECTION I

GENERAL DESCRIPTION

1. GENERAL.

a. Interphone Equipment RC-35 is a two-place interphone equipment for basic training aircraft. Electrically it is identical with Interphone Equipment RC-34 which is described in Part I of this Handbook. Mechanically it differs in that Interphone Equipment RC-35 has a remote-control switch which allows the occupant of the cockpit in which Interphone Box BC-335 (Remote) is installed to mechanically operate the switch on Interphone Control Box BC-334 (Master), mounted in the other cockpit. Figure 2-1 illustrates the principal components of Interphone Equipment RC-35.

b. Users of Interphone Equipment RC-35 should, therefore, study Part I of this handbook which pertains to Interphone Equipment RC-34. Part II includes only instructions for use of equipment comprising Interphone Equipment RC-35 which is additional to that used with the interphone equipment described in Part I.

2. COMPONENT PARTS.

All the components listed for Interphone Equipment RC-34 are needed for Interphone Equipment RC-35 and in addition, the following items are required for Interphone Equipment RC-35:

Quantity	*Name of Part*	*Overall Dimensions*	*Weight (in lbs.)*
1	Control Box BC-327 (Remote)	3⅝"x2½"x1 3/16"	0.25
1	Control Shaft MC-166 or MC-166-A	6' long	0.43

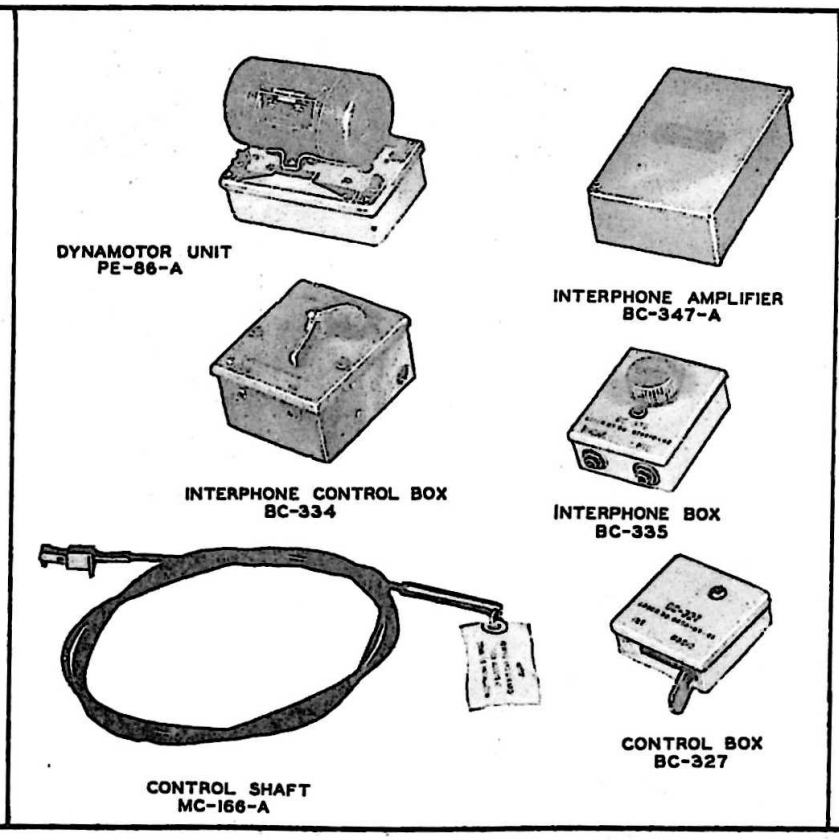

Figure 2-1. Interphone Equipment RC-35—Major Assemblies

SECTION II
INSTALLATION AND ADJUSTMENTS

1. INSTALLATION OF CONTROL BOX BC-327 (REMOTE).

Control Box BC-327 (Remote) is installed in the cockpit with Interphone Box BC-335 (Remote). When installing Control Box BC-327, it is important to locate it in such a manner that Control Shaft MC-166 or MC-166-A will be as straight as possible. When it is necessary to make bends, they should be as gradual as is practicable and under no circumstances should bends be made on a radius of less than 4 inches. Do not permit loops in the cable. They impair the operation of the control shaft and can be avoided by cutting off any excess length.

2. ASSEMBLY OF CONTROL SHAFT MC-166 OR MC-166-A.

a. Shorten the control shaft if necessary. To reduce the length of the control shaft, first pull the shaft out of the casing for enough to cut off the required length of casing without danger of cutting into the shaft. After the casing has been cut to the required length, cut the shaft 2 inches longer than the casing.

b. Attach the control shaft to Interphone Control Box BC-334 as follows: (See fig. 2-2.) Screw the swivel 47 into the tapped hole provided near the tapped hole provided near the end of the handle on the knob 46. The swivel should be tightened so that the pin 48 around which the coupling pivots, is perpendicular to the face of the box. The control shaft is attached to the clevis (52) by the hexagonal-socket set screw 49. The control shaft casing is held by the bracket 51 which is attached to the box by the screw holding the right-hand side of the cover. Two hexagonal-socket set screws (50) hold the control-shaft casing in the bracket 51.

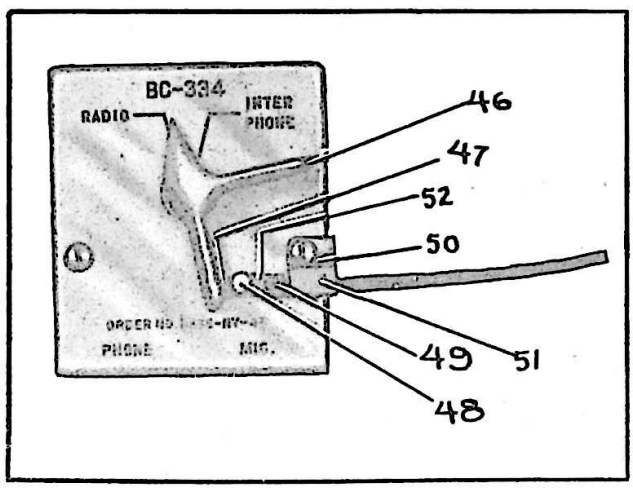

Figure 2-2. Interphone Control Box BC-334 (Master) with Control Shaft MC-166-A Attached

c. Attach the control shaft to Control Box BC-327 as follows: (See fig. 2-3.) Mount Control Box BC-327 on the airplane structure at the position decided upon when determining the routing and length of the control shaft. Drill the mounting holes through the back of the case in such positions that the screw heads will not interfere with the operation of the lever or associated control shaft.

NOTE

Do not cut the shaft to its final length or attach it to the clevis 44 of Control Box BC-327 until the installation has been otherwise completed.

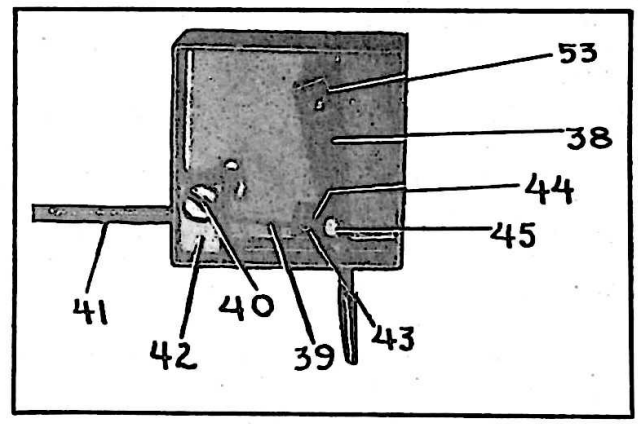

Figure 2-3. Control Box BC-327 (Remote) with Control Shaft MC-166-A Attached

Remove the protective sleeve from the remote end of the control shaft, and clamp the remote end of the control-shaft casing 41 to Control Box BC-327 by means of the split-collar clamp 42 and the screw 40 illustrated in figure 2-3. Push the casing through the clamp 42 until it is flush with the inside surface of the clamp, and tighten the screw 40 until the casing is rigid. Fasten the casing to the airplane structure in any convenient manner at several points along its length, taking care not to bend or crimp the casing.

Now cut the shaft 39 to its correct length as follows: First, place the switch on Interphone Control Box BC-334 in the "RADIO" position. Then, on Control Box BC-327 measure out from the face of the clamp 42, holding the control-shaft casing 41, and cut the shaft 39 to a length of 1-3/16 inches. The shaft will then extend 1-3/16 inches beyond the casing which is flush with

the inside face of the clamp. Next, place the Interphone Control Box BC-334 switch in a position midway between "RADIO" and "INTERPHONE." This will draw the shaft 39 back into the casing a sufficient amount to allow it to be inserted in the clevis 44 attached to lever 38 of Control Box BC-327 by the pin 45. After pushing the shaft through the hole provided in the clevis, tighten the hexagonal-socket set screw 43 to hold it in place.

The appearance of the interior of Control Box BC-327 (Remote) after the control shaft has been attached and adjusted is shown in figure 2-3.

After the installation is completed, operate the controls several times, and then check all set screws and fittings to make certain that they are properly secured.

SECTION III
OPERATION

1. STARTING AND STOPPING EQUIPMENT.

Starting and stopping of this equipment is the same as that for Interphone Equipment RC-34. (Refer to part I, section III, par. 1.)

2. OPERATING THE INTERPHONE EQUIPMENT.

The operation of this equipment is the same as that of Interphone Equipment RC-34 (refer to part I, section III, par. 2), except that Control Box BC-327 and Control Shaft MC-166 or MC-166-A have been added to the system. Control Box BC-327 is installed in the remote cockpit; its operation is detailed below:

a. INTERPHONE—To use the interphone circuit from the remote cockpit proceed as follows:

(1) Place the lever on Control Box BC-327 in the "INT." position. This mechanically switches the knob on Interphone Control Box BC-334 to the "INTERPHONE" position and connects both microphones and both headsets to the interphone amplifier.

(2) Close the microphone switch and speak into the microphone; an accurate reproduction of the speaker's voice will be heard in both headsets.

(3) The volume control in Interphone Box BC-335 is not effective on the interphone circuit.

b. RADIO—To operate the radio set from the remote cockpit proceed as follows:

(1) Place the lever on Control Box BC-327 in the "RADIO" position. This mechanically switches the knob on Interphone Control Box BC-334 to the "RADIO" position and connects both microphones and both headsets to the radio set. The output of the radio receiver will be heard in each headset.

(2) Since a volume control is not provided on Interphone Control Box BC-334, the pilot controls the output level in both headsets by means of the radio receiver volume control. It is possible to reduce the output level in the remote position by means of the control on Interphone Box BC-335.

(3) Close the microphone switch and speak into the microphone. The transmitter will be modulated and the voice output of the sidetone circuit will be heard in the headsets, provided that the "VOICE-CW-TONE" switch on the transmitter control box is in the "VOICE" position.

IMPORTANT

In order to insure satisfactory operation of this equipment, do not close more than one microphone switch at a time.

SECTION IV
THEORY OF OPERATION

Refer to Part I, Section IV

SECTION V
MAINTENANCE

Refer to Part I, Section V

PART III
INTERPHONE EQUIPMENT RC-35-Z

1. GENERAL.

Interphone Equipment RC-35-Z is a two-place interphone equipment for basic training aircraft, and is operated from a 12-14 volt d-c supply voltage. It is identical with Interphone Equipment RC-35 described in part II of this handbook, except that Interphone Amplifier BC-347-C is replaced by Interphone Amplifier BC-347-CZ Interphone Amplifier BC-347-CZ is a 12-14 volt adaptation of Interphone Amplifier BC-347-C and differs from it in the following respects:

a. A 12-ohm, 20-watt resistor is used for the filament dropping resistor 13 in place of the 35-ohm 20-watt resistor used in the BC-347-C.

b. A 125-ohm, 1-watt resistor is used for the microphone series resistor in lieu of the 350-ohm resistor used in the BC-347-C.

c. Interphone Amplifier BC-347-CZ operates from a 12-14 volt d-c primary power source and requires a 250-volt d-c plate voltage. The amplifier requires 0.7 amperes at 14 volts d-c and 18 milliamperes at 250 volts, a total power of approximately 14.0 watts.

PART IV
INTERPHONE EQUIPMENT RC-36

SECTION I
GENERAL DESCRIPTION

1. GENERAL.

a. Interphone Equipment RC-36 is an interphone system designed for use in multiplace aircraft. It provides interphone communication between the various stations within the airplane. Switching facilities for partial control of two complete radio sets and one additional radio receiver are provided.

b. Power supply requirements for this equipment are the same as those for Interphone Equipment RC-34. (Refer to part I, section I).

2. EQUIPMENT REQUIRED.

Interphone Equipment RC-36 consists of the following parts. These items may be supplied as part of the interphone equipment, part of the radio sets used with the interphone equipment, part of the aircraft installation or separately. (See fig. 4-1.)

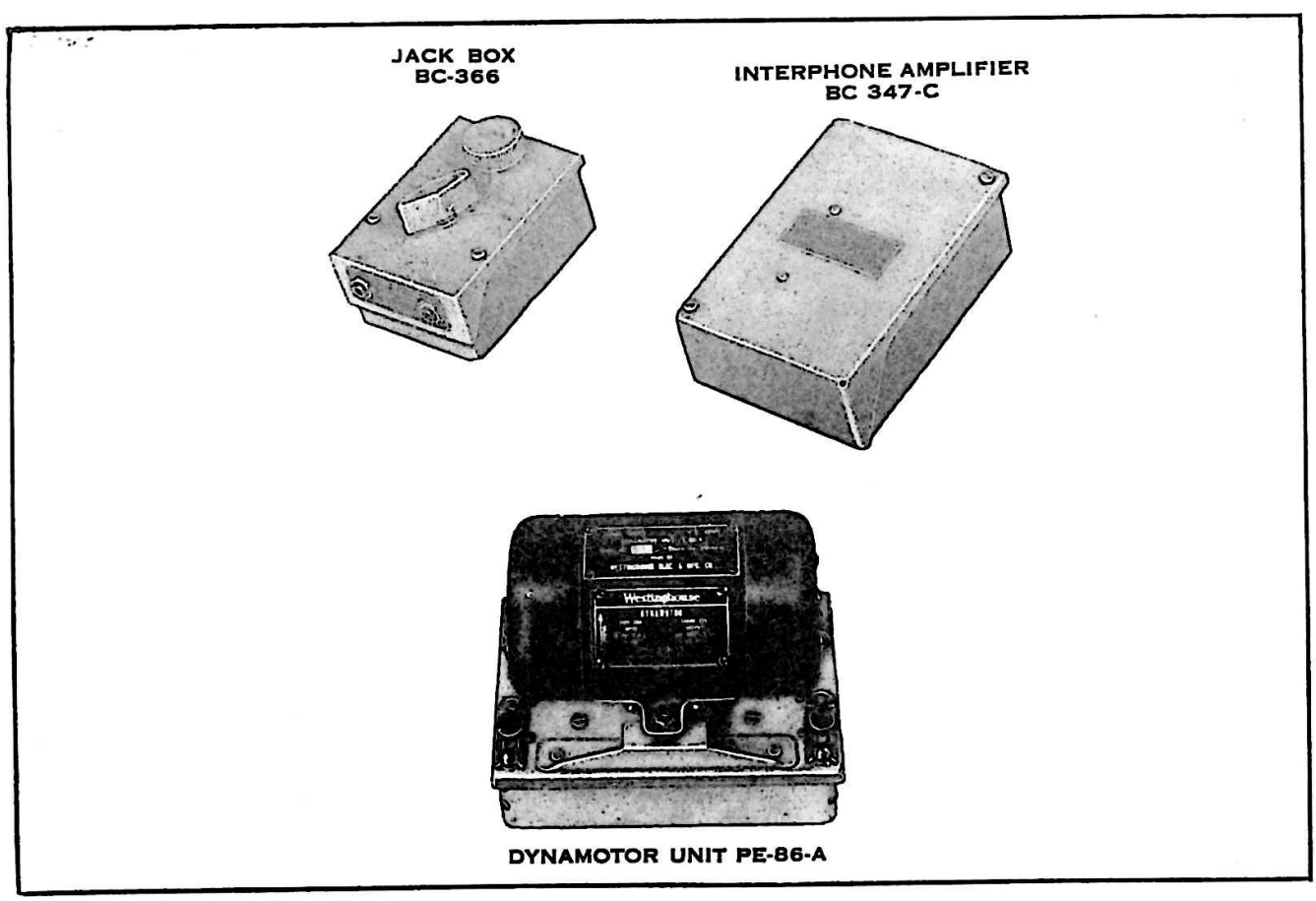

Figure 4-1. Interphone Equipment RC-36—Major Assemblies

Quantity	Name of Part	Overall Dimensions (in inches)	Weight (in lbs.)
1	Interphone Amplifier BC-347-C or B-347-A "Modified" with 1 each Tube JAN-6F8G (VT-99)	5⅞ x 4 x 2⅜	1.5
*	Jack Box BC-366	4 11/16 x 3¼ x 3 1/16	1.0
1	Dynamotor Unit PE-86-( )	5¼ x 3½ x 5	3.6
‖	Mounting FT-486	6½ x 3¾ x 1⅛	1.8
* §	Cord CD-307-A		
* †	Cord CB-508-A		.625
* † ‡	Microphone ANB-M-C1 (in oxygen mask)		.1
*	Headset HS-33 or		.7
*	Headset MS-38 (for flyers helmet)		.5
*	Headset Adapter MC-385-( )	3⅛ x 2 1/16 x 1⅛	.25

* Quantity required (one per position) depends on the individual installation plan of the airplane. A maximum of 10 positions can be used.

§ The exact length of Cord CD-307-A depends on the individual aircraft installation.

‡ The following microphones may be used in place of Microphone ANB-M-C1:

(1) Microphone T-30-P, -Q, -R, -S, -U or -V.

(2) Microphone T-17, T-17-B, T-17-D or T-17-E.

‖ One each Mounting FT-486 must be used with each Interphone Amplifier BC-347-C or BC-347-A "Modified" in all B-25, A-20 and AT-24 aircraft.

† Whenever Microphone ANB-M-C1 or Microphone T-30-P, -Q, -R, -S, -U or -V are used one or another of the following microphone cords must be provided; the type of cord required depends upon the installation plan on the airplane.

(1) *Cord CD-508 or CD-508-A.* These cords include a Switch SW-141-( ) which provides "ON OFF" control of the send-receive relay of the radio sets associated with this interphone equipment, and provides for the opening or closing of the microphone circuit.

(2) *A fabricated microphone cord and a suitable control switch such as Microphone Switch SA-26/U.* The fabricated cord requires a Jack JK-48 and a length of Cordage CO-219; may also include a Plug PL-68 and a length of Cordage CO-122-A or -B.

3. DESCRIPTION OF MAJOR ASSEMBLIES.

Headset Adapter MC-385-C or -D only must be used at pilot's and co-pilot's stations where Filter Equipment RC-198 is installed. A headset adapter with any suffix letter (-A,-B,-C,-D) may be used at any other station in the airplane.

a. GENERAL. The interphone amplifiers and dynamotors used in this equipment are the same as those used with Interphone Equipment RC-34. (Refer to part I, section I, paragraphs 3*a* and *b*.)

b. JACK BOX BC-366. Jack Box BC-366 consists of a five-position rotary switch, variable resistor, a phone jack, a microphone jack, and plug and jack terminal plates, all housed in an aluminum box. The switch positions are marked "COMP," "LIAISON," "COMMAND," "INTER" and "CALL."

4. INTERCHANGEABILITY OF MAJOR ASSEMBLIES.

Refer to part I, section I, paragraph 4.

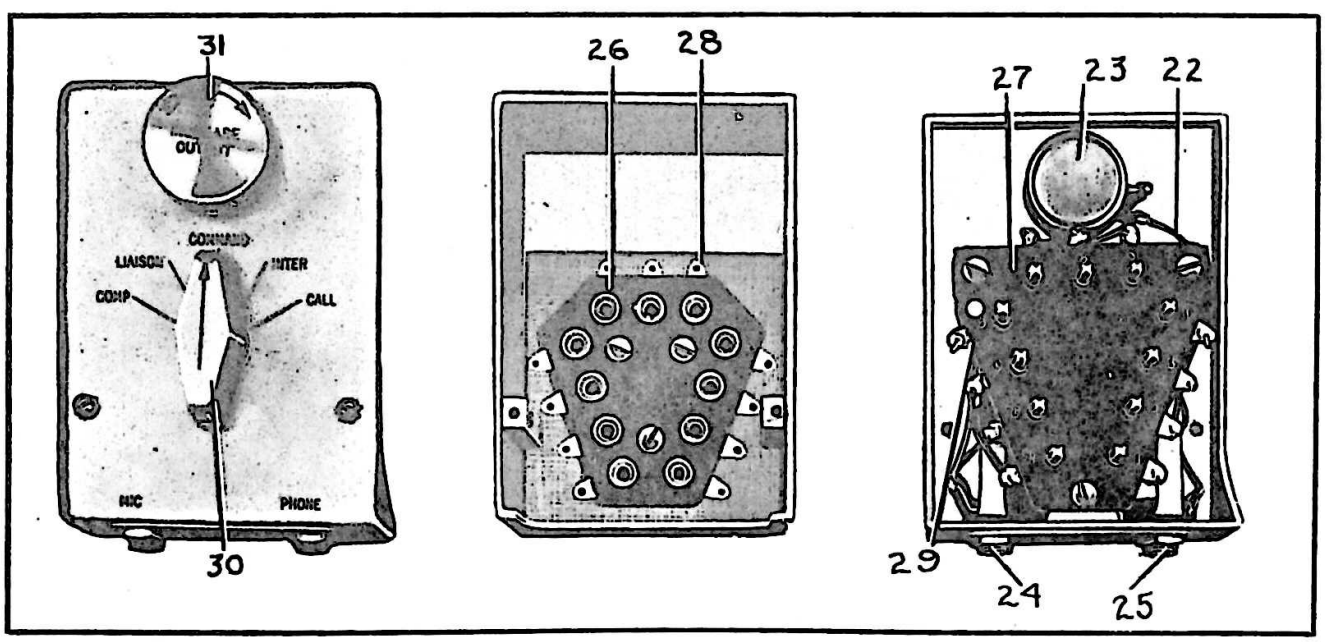

Figure 4-2. Jack Box BC-366—Overall Views

SECTION II
INSTALLATION AND ADJUSTMENTS

1. PRE-INSTALLATION BENCH TESTS.

Refer to part I, section II, paragraph 1.

2. INSTALLATION.

a. PREPARATION FOR INSTALLATION.—Each box must be prepared for installation by punching or drilling the necessary holes for mounting and wiring the equipment (See fig. 4-3.) Care should be taken to place the various holes so that the interconnecting wires, grommets, and mounting screws will not interfere with the jack terminal plates or strips, wiring or internal components of the cover assemblies, or the assembly of the covers to the boxes. Mounting holes and holes for interconnecting wiring should be located in accordance with data given in the appropriate Air Force drawing. If Mounting FT-486 is required, assemble the amplifier to the mounting as follows:

(1) Glue the template (furnished with the mounting) to the bottom of the amplifier box in accordance with the instructions on the template.

(2) Drill the four No. 2 holes in the bottom of the amplifier box.

(3) Assemble the amplifier to the mounting using the #10 binding head screws and lockwashers furnished with the mounting. The base plate for the mounting is already drilled for installation and no additional preparation is required.

b. LOCATION OF MAJOR ASSEMBLIES.—Install the jack box in a location easily accessible to the using personnel. Install the interphone amplifier and the dynamotor in an accessible location such that the leads to the jack boxes will be as short as it is convenient to make them.

c. WIRING.—After the interphone amplifier, dynamotor, and jack boxes have been mounted in the proper locations in the airplane, interconnect them with Air Force wire (Specification AN-J-C-48) in compliance with Specification AN-W-14. Wire the circuits in accordance with standard Air Force drawings.

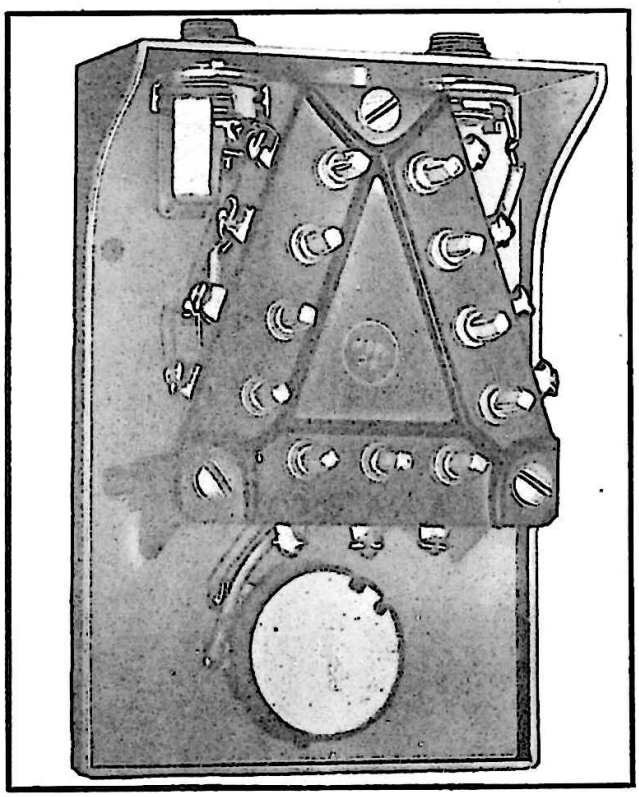

Figure 4-3. Jack Box BC-366—Interior View

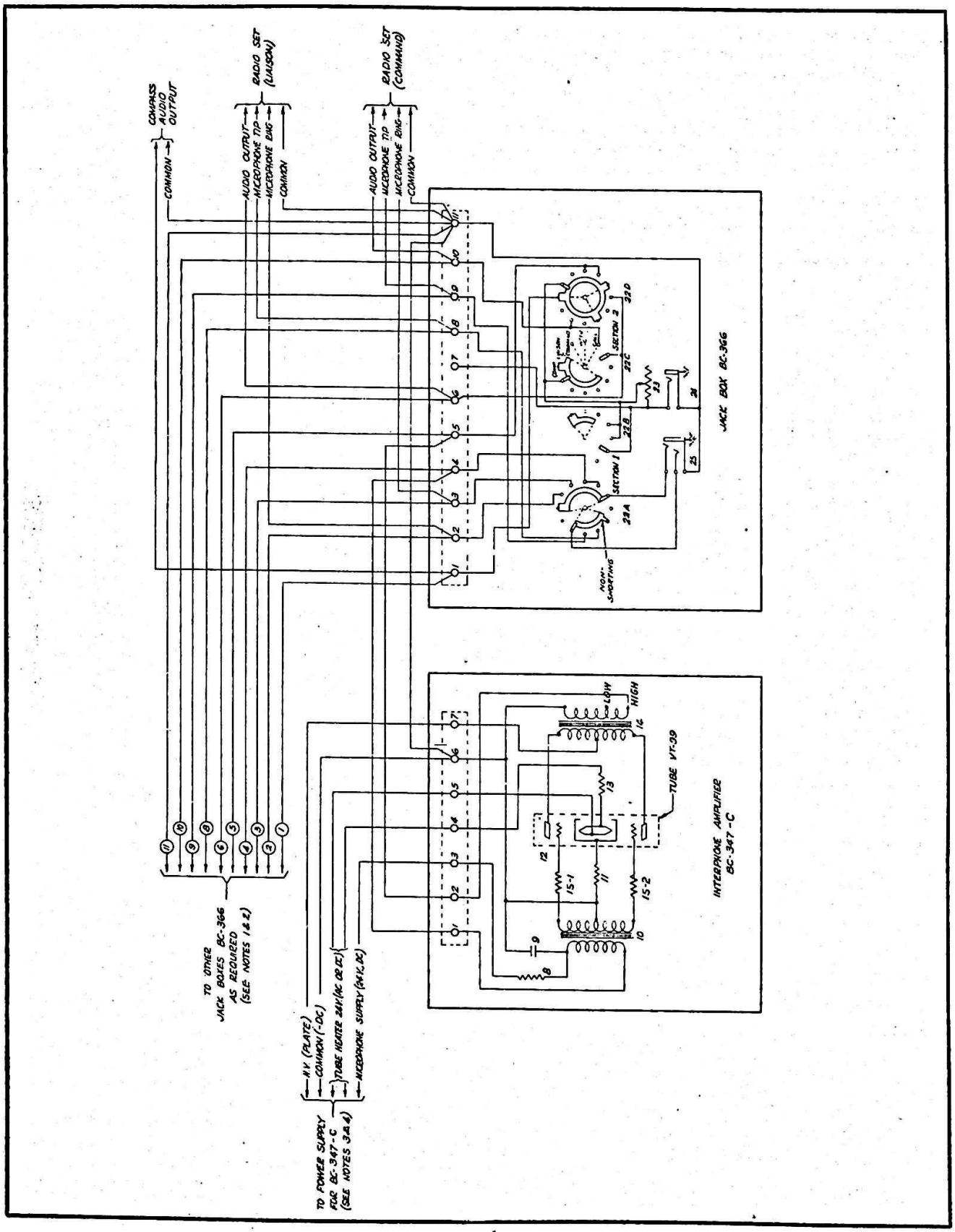
COMPASS AUDIO OUTPUT
COMMON
RADIO SET (LIAISON)
AUDIO OUTPUT
MICROPHONE TIP
MICROPHONE RING
COMMON
RADIO SET (COMMAND)
AUDIO OUTPUT
MICROPHONE TIP
MICROPHONE RING
COMMON
JACK BOX BC-366
SECTION 1
SECTION 2
NON-SHORTING
TO OTHER JACK BOXES BC-366 AS REQUIRED (SEE NOTES 1 & 2)
INTERPHONE AMPLIFIER BC-347-C
TUBE VT-39
LOW
HIGH
TO POWER SUPPLY FOR BC-347-C (SEE NOTES 3 & 4)
N.V. (PLATE)
COMMON (-DC)
TUBE HEATER 24V (AC OR DC)
MICROPHONE SUPPLY (6V DC)

Use shielded wire for all microphone leads between jack boxes and between the jack boxes and the interphone amplifier. Bond all shields together and ground them at each box. Connect all incoming wires for the jack boxes, dynamotor, and interphone amplifier to the soldering lugs on the underside of the jack terminal plates. The jack terminal plates are mounted on the bottoms of the boxes and may be removed from the boxes when making the connections. An overall schematic is shown in figure 4-4.

d. POWER SUPPLY FOR INTERPHONE AMPLIFIER.—*Refer to part I, section II, paragraph 2d.*

3. ADJUSTMENT OF THE OUTPUT TAP.

Refer to part I, section II, paragraph 3.

4. AFTER-INSTALLATION CHECK.

Turn on the interphone equipment and the radio sets associated therewith, and check each function of the equipment to make certain that it operates as detailed in section III, of this part. A functional diagram of headset and microphone circuits for the switch positions of Jack Box BC-366 is shown in figure 4-5.

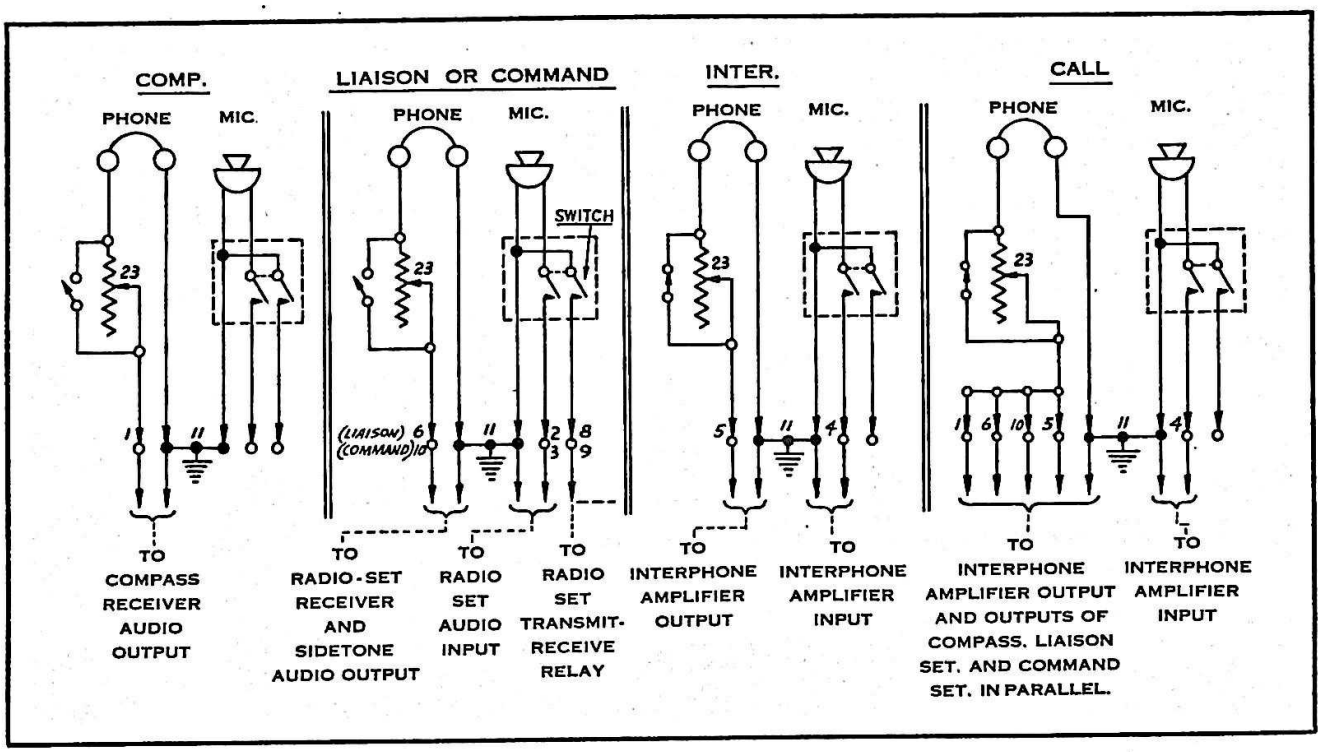

Figure 4-5. Jack Box BC-366—Functional Diagrams for all Switch Positions

SECTION III
OPERATION

1. STARTING AND STOPPING EQUIPMENT.

Refer to part I, section III, paragraph 1.

2. OPERATING FROM THE JACK BOX POSITIONS.

IMPORTANT

In order to insure satisfactory operation of this equipment do not close more than one microphone switch at a time on any one facility.

When the interphone system and the radio sets interconnected therewith are properly installed, connected, and operating, operation of the various facilities may be obtained in the following manner:

a. COMPASS.—To use the radio compass proceed as follows:

(1) Place the selector switch on the jack box in the "COMP" position. The audio output of the compass receiver will be heard in the headset.

(2) Adjust the volume control for desired output level. The maximum signal available will depend on the setting of the receiver volume control.

b. LIAISON.—To use the liaison radio set proceed as follows:

(1) Place the selector switch on the jack box in the "LIAISON" position. The audio output of the liaison radio set will be heard in the headset.

(2) Adjust the volume control for desired output level. The maximum signal available will depend on the setting of the liaison receiver volume control.

(3) To transmit on the liaison radio set, close the microphone switch and speak into the microphone. The transmitter will be modulated and the voice output of the sidetone circuit will be heard in the headset, provided the emission selector switch ("TONE-CW-VOICE" or "VOICE-CW-MCW" switch) on the transmitter is in the "VOICE" position.

c. COMMAND.—To use the command radio set proceed as follows:

(1) Place the selector switch on the jack box in the "COMMAND" position. The audio output of the command radio set will be heard in the headset.

(2) Adjust the volume control for desired output level. The maximum signal available will depend on the setting of the command receiver volume control.

(3) To transmit on the command radio set, close the microphone switch and speak into the microphone. The transmitter will be modulated and the voice output of the sidetone circuit will be heard in the headset, provided the emission selector switch ("TONE-CW-VOICE" or "VOICE-CW-TONE" switch, as applicable) on the transmitter is in the "VOICE" position.

d. INTERPHONE.—To use the interphone circuit proceed as follows:

(1) Place the selector switch on the jack box in the "INTER" position. Any voice conservation on the interphone channel will be heard in the headset.

(2) The volume control is not effective when the selector switch is in the "INTER" position.

(3) To talk on the interphone channel, close the microphone switch and speak into the microphone.

(4) If the crew member called does not have the selector switch on his jack box in the interphone position, proceed as indicated in sub-paragraph *e* below.

e. CALL.—To call a crew member who has the selector switch on his jack box in some position other than "INTER" proceed as follows:

(1) Hold the selector switch on the jack box in the "CALL" position.

(2) Close the microphone switch and call the other crew member.

(3) The crew member called should place the selector switch on his jackbox in the "INTER" position, and answer the call, after which the crew member making the call should release the selector switch on his jack box, place the switch on the "INTER" position, and continue the conversation on the interphone channel.

IMPORTANT

1. Since the "CALL" facility interrupts the radio channels of all the crew members it should be used only as a calling circuit.
2. The "INCREASE OUTPUT" control on the jack box should be left at the maximum output setting whenever possible in order that "CALL" signals may be more easily heard.

SECTION IV
THEORY OF OPERATION

Refer to Part I, Section IV

SECTION V
MAINTENANCE

Refer to Part I, Section V

PART V
INTERPHONE EQUIPMENT RC-36-B

SECTION I
GENERAL DESCRIPTION

1. GENERAL.

Interphone Equipment RC-36-B is designed for use in multiplace airplanes, and provides interphone communication between the various interphone stations within the airplane. Switching facilities for partial control of three complete radio sets and one additional radio receiver are provided. Interphone Equipment RC-36-B is the same as Interphone Equipment RC-36 except that Jack Box BC-1366 is used in place of Jack Box BC-366.

2. EQUIPMENT REQUIRED.

The equipment required is the same as that for Interphone Equipment RC-36 detailed in Part IV, Section I,

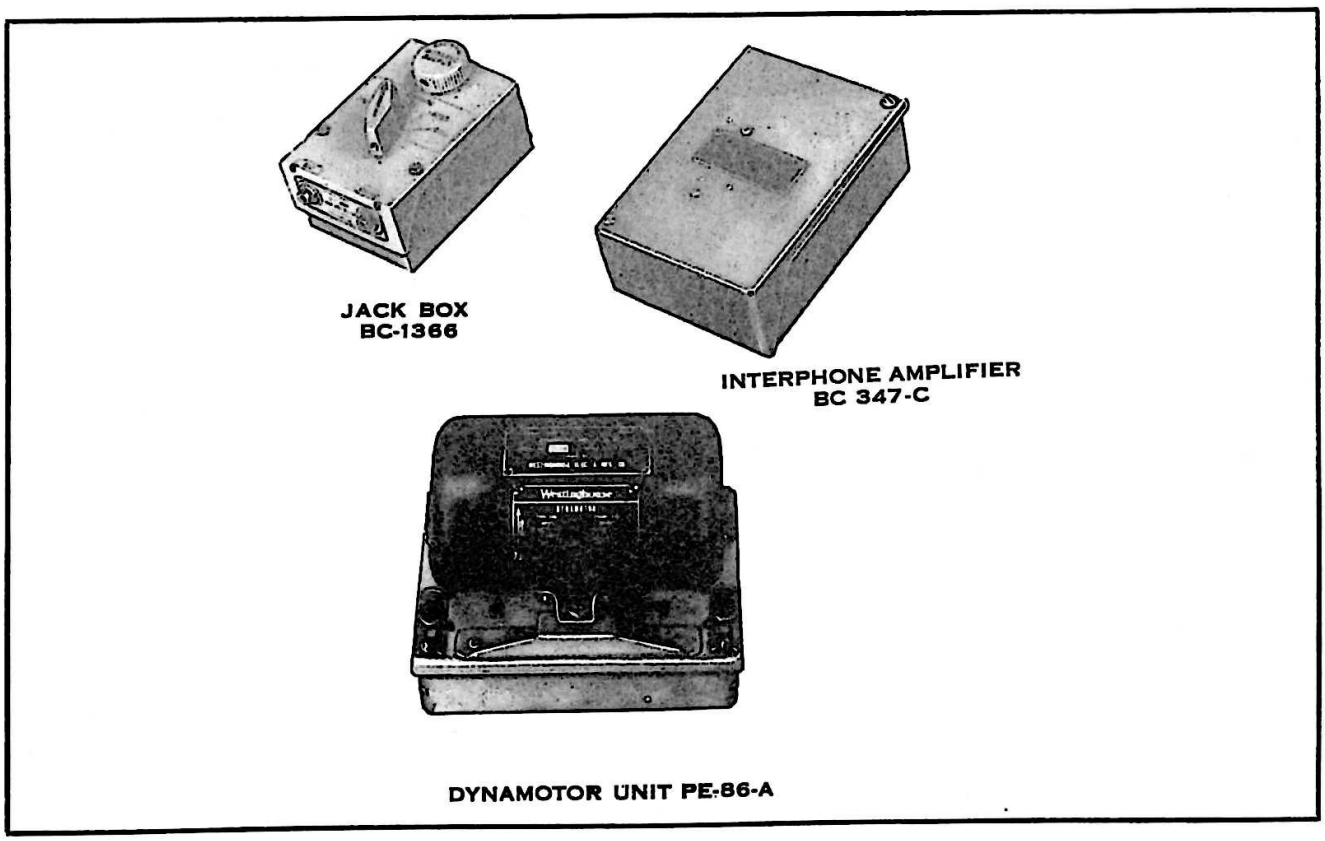

Figure 5-1. Interphone Equipment RC-36-B—Major Assemblies

Paragraph 2, except that Jack Box BC-1366 is required in place of Jack Box BC-366. (See fig. 5-1.)

3. DESCRIPTION OF MAJOR ASSEMBLIES.

a. GENERAL.—The interphone amplifiers and dynamotors used in this equipment are the same as those used with Interphone Equipment RC-34. (Refer to part I, section I, paragraphs 3*a* and *b*.)

b. JACK BOX BC-1366.—Jack Box BC-1366 consists of a five-position rotary switch, a variable resistor, a phone jack, a microphone jack, and plug and jack terminal plates, all housed in an aluminum box. The switch positions are marked "COMP", "VHF-LIAISON", "COMMAND", "INTER" and "CALL".

4. INTERCHANGEABILITY OF MAJOR ASSEMBLIES.

Refer to Part I, Section I, Paragraph 4.

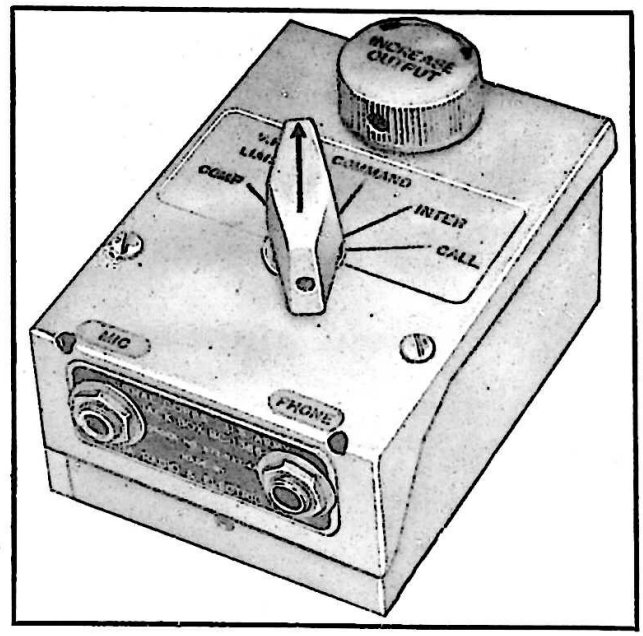

Figure 5-2. Jack Box BC-1366—Exterior View

SECTION II
INSTALLATION AND ADJUSTMENT

1. PRE-INSTALLATION BENCH TESTS.

Refer to Part I, Section II, Paragraph 1.

2. INSTALLATION.

a. PREPARATION FOR INSTALLATION.—*Refer to Part IV, Section II, Paragraph 2a.*

b. LOCATION OF MAJOR ASSEMBLIES.—*Refer to Part IV, Section II, Paragraph 2b.*

c. WIRING.—After the interphone amplifier, dynamotor, and jack boxes have been mounted in the proper locations in the airplane interconnect them with Air Force Wire (Specification AN-J-C-48) in compliance with Specification AN-W-14. Wire the circuits in accordance with standard Air Force drawings. Use shielded wire for all microphone leads between jack boxes, and between the jack boxes and the interphone amplifier. Bond all shields together and ground them at each box.

See figure 5-5 for a typical installation schematic.

(1) For the radio operator's jack box, wire the liaison radio set to the "LIAISON-VHF" terminals of the jack box (terminals 2, 6 and 8), and connect the audio output of the VHF radio set to the spare call circuit (terminal 7 of the jack box). Block out the letters "VHF" on the cover.

(2) For all other jack box stations in the airplane, connect the VHF radio set to the "LIAISON-VHF" terminals of the jack box (terminals 2, 6 and 8), and wire the audio output of the liaison radio set to the

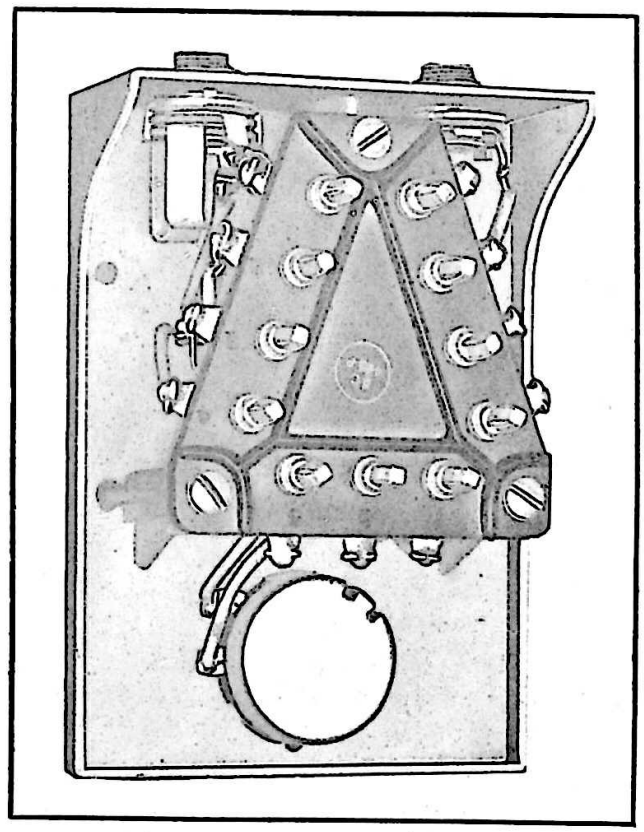

Figure 5-3. Jack Box BC-1366—Interior View

spare call circuit (terminal 7 of the jack box). (See fig. 5-3.) Block out the word "LIAISON" on the cover.

d. POWER SUPPLY FOR INTERPHONE AMPLIFIER. *Refer to part I, section II, paragraph 2d.*

3. ADJUSTMENTS OF THE OUTPUT TAP.
Refer to part I, section II, paragraph 3.

4. AFTER-INSTALLATION CHECK.

Turn on the interphone equipment and the radio sets associated therewith, and check each function of the equipment to make certain that it operates as detailed in section III this part.

SECTION III
OPERATION

1. STARTING AND STOPPING EQUIPMENT.
Refer to Part I, Section III, Par. 1.

2. OPERATION FROM THE JACK BOX POSITIONS.

IMPORTANT

In order to insure satisfactory operation of this equipment, do not close more than one microphone switch at a time on any one facility.

When the interphone system and the radio sets interconnected therewith are properly installed, connected and operating, operation of the various facilities may be obtained in the following manner:

a. COMPASS.—To use the radio compass proceed as follows:

(1) Place the selector switch in the "COMP" position. The audio output of the compass receiver will be heard in the headset.

(2) Adjust the volume control for desired output level. The maximum signal available will depend on the setting of the compass receiver volume control.

(3) The microphone does not operate in this position.

b. VHF (for Jack Box stations other than Radio Operators).—To use the VHF radio set proceed as follows:

(1) Place the selector switch on the jack box in the "VHF" position. The audio output of the VHF command radio set will be heard in the headset.

(2) Adjust the volume control for desired output level. The maximum signal available will depend on the setting of the VHF receiver volume control.

(3) To transmit on the VHF command set, close the microphone switch and speak into the microphone. The transmitter will be modulated, and the voice output of the sidetone circuit will be heard in the headset.

c. LIAISON (Radio Operator's Station Only).—To use the liaison radio set, proceed as follows:

(1) Place the selector switch on the jack box in the "LIAISON" position. The audio output of the liaison radio set will be heard in the headset.

(2) Adjust the volume control for desired output level. The maximum signal available will depend on the setting of the liaison receiver volume control.

(3) To transmit on the liaison radio set, close the microphone switch and speak into the microphone. The transmitter will be modulated and the voice output of the sidetone circuit will be heard in the headset, provided the emission selector switch, ("TONE-CW-VOICE" or "VOICE-CW-MCW" switch) on the transmitter is in the "VOICE" position.

d. COMMAND.—To use the command radio set, proceed as follows:

(1) Place the selector switch on the jack box in the "COMMAND" position. The audio output of the command radio set will be heard in the headset.

(2) Adjust the volume control for desired output level. The maximum signal available will depend on the setting of the command receiver volume control.

(3) To transmit on the command radio set, close the microphone switch and speak into the microphone. The transmitter will be modulated, and the voice output of the sidetone circuit will be heard in the headset, provided the emission selector switch ("TONE-CW-VOICE" or "VOICE-CW-TONE" switch) on the transmitter is in the "VOICE" position.

e. INTERPHONE.—To use the interphone circuit, proceed as follows:

(1) Place the selector switch on the jack box in the "INTER" position. Any voice conversations on the interphone channel will be heard in the headset.

(2) To talk on the interphone channel, close the microphone switch and speak into the microphone.

(3) The volume control is not effective when the selector switch is in the "INTER" position.

(4) If the crew member called does not have the selector switch on his jack box in the interphone position proceed as indicated in sub-paragraph *f* below.

f. CALL—To call a crew member who has the selector switch on his jack box in some position other than "INTER," proceed as follows:

(1) Hold the selector switch on the jack box in the "CALL" position.

(2) Close the microphone switch and call the other crew member.

(3) The crew member called should place the selector switch on his jack-box in the "INTER" position and answer the call, after which the crew member making the call should release the selector switch on his jack box. Place the switch on the "INTER" position and continue the conversation on the interphone channel.

IMPORTANT

1. Since the "CALL" facility interrupts the radio channels of all the crew members, it should be used only as a calling circuit.

2. The "INCREASE OUTPUT" control on the jack box should be left at the maximum output setting whenever possible in order that "CALL" signals may be more easily heard.

3. A functional diagram of the headset and microphone circuits for the switch positions of Jack Box BC-1366 is shown in figure 5-4.

SECTION IV

THEORY OF OPERATION

Refer to Part I, Section IV

SECTION V

MAINTENANCE

Refer to Part I, Section V

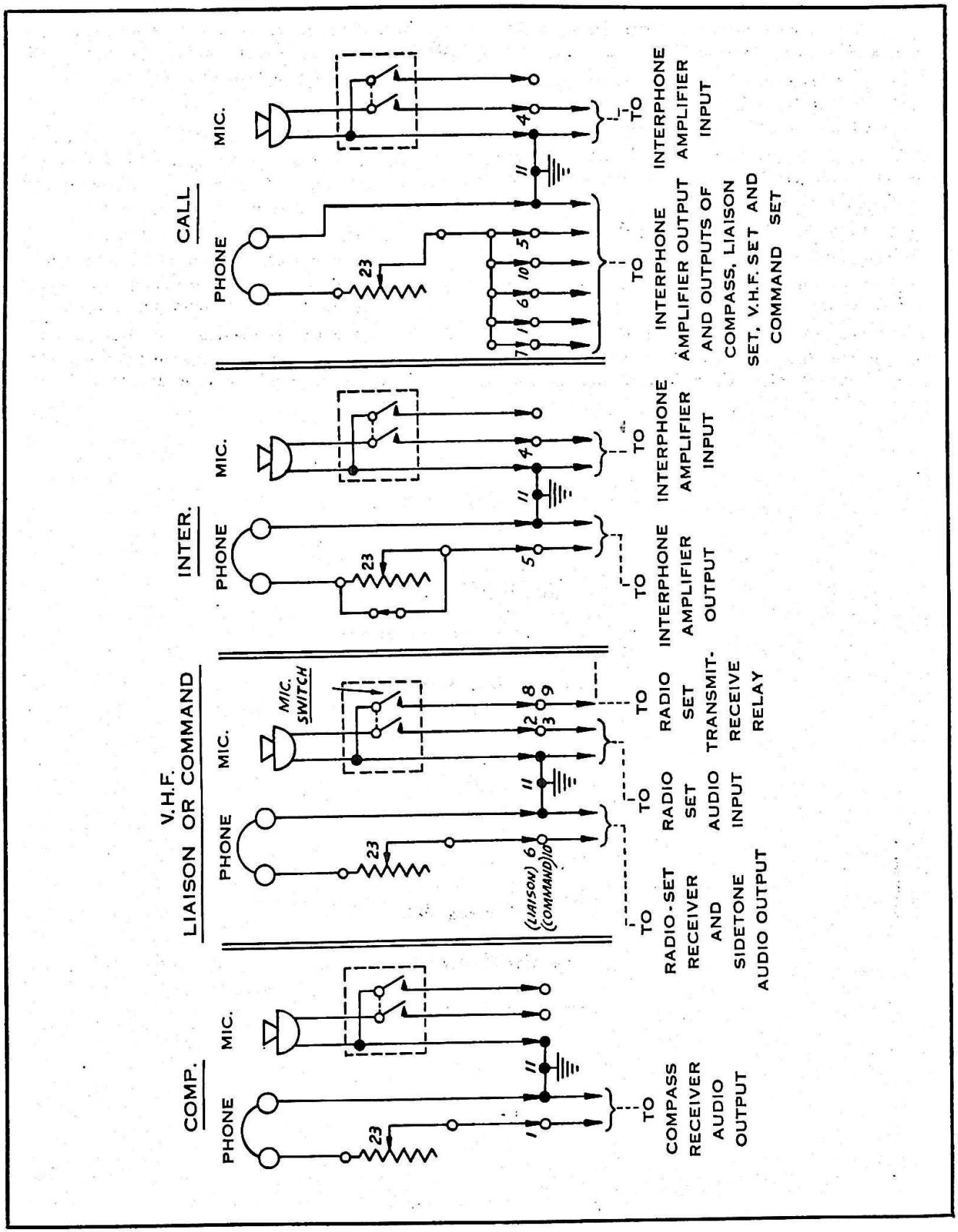

Figure 5-4. Jack Box BC-1366—Functional Diagrams for All Switch Positions.

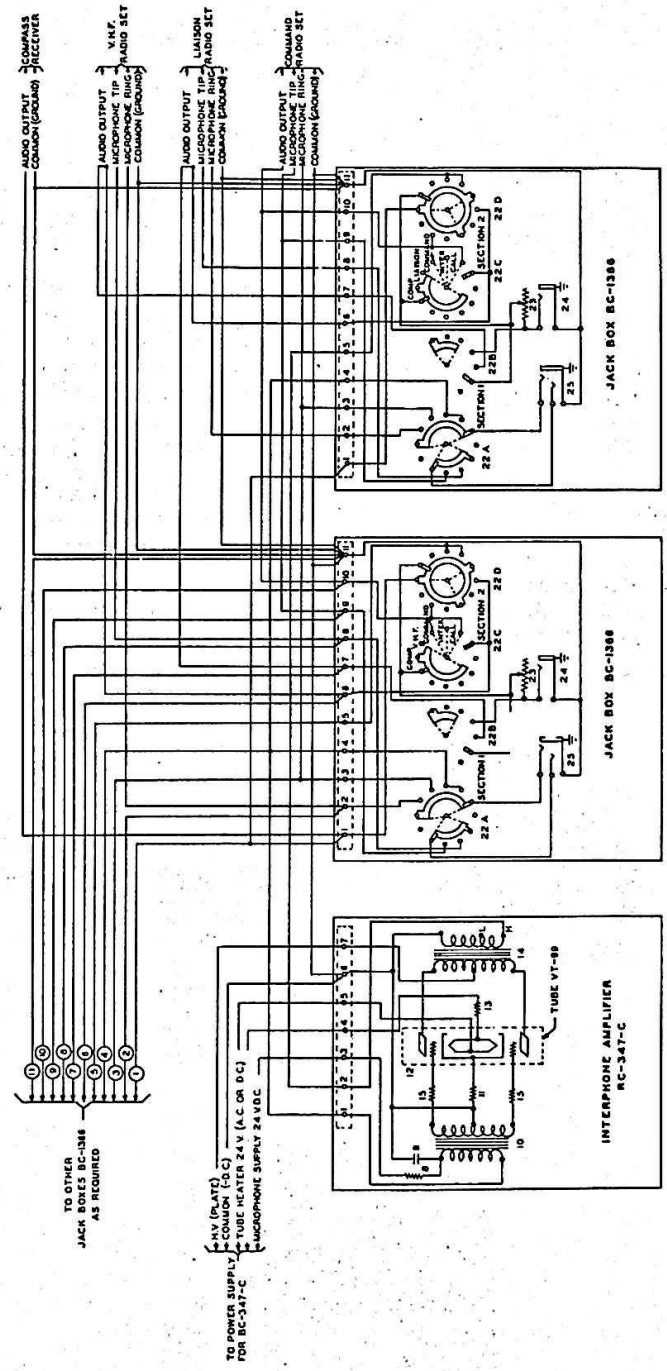

Figure 5-5. Interphone Equipment RC-36-B—Typical Schematic Wiring Diagram

PART VI

INTERPHONE EQUIPMENT RC-51

SECTION I

GENERAL DESCRIPTION

1. GENERAL.

Interphone Equipment RC-51 is designed for use in multiplace airplanes, and provides interphone communication between the various interphone stations within the airplane. Switching facilities for partial control of two radio sets are also provided.

Interphone Equipment RC-51 is the same as Interphone Equipment RC-36 except that Jack Box BC-213-A or BC-213-B is used in place of Jack Box BC-366. Interphone Equipment RC-36 or RC-36-B will be used in all new multiplace installations.

2. EQUIPMENT REQUIRED.

The equipment required is the same as that for Interphone Equipment RC-36, detailed in part IV, section I, paragraph 2, except that Jack Box BC-213-A or BC-213-B is used in place of Jack Box BC-366 (See fig. 6-1.)

3. DESCRIPTION OF MAJOR ASSEMBLIES.

The interphone amplifiers and dynamotor are the same as those used with Interphone Equipment RC-34. (Refer to part I, section I, pars. 3 a and b.)

b. Jack Box BC-213-A and B.—Jack Box BC-213-A or BC-213-B consists of a four-position rotary switch, a variable resistor, a phone jack, a microphone jack, and plug and jack terminal strips, all housed in an aluminum box. (See fig. 6-2.) The approximate size is 5½" x 2-⅞" x 3" and the weight approximately 1 lb. The switch positions are marked "R-1", "R-2", "INT" and "I-R".

4. INTERCHANGEABILITY OF MAJOR ASSEMBLIES.

a. The interchangeability of the interphone amplifiers, dynamotors and microphones is the same as for Interphone Equipment RC-34. (Refer to part I, section I, par. 4.)

b. Jack Box BC-213-A is interchangeable with Jack Box BC-213-B.

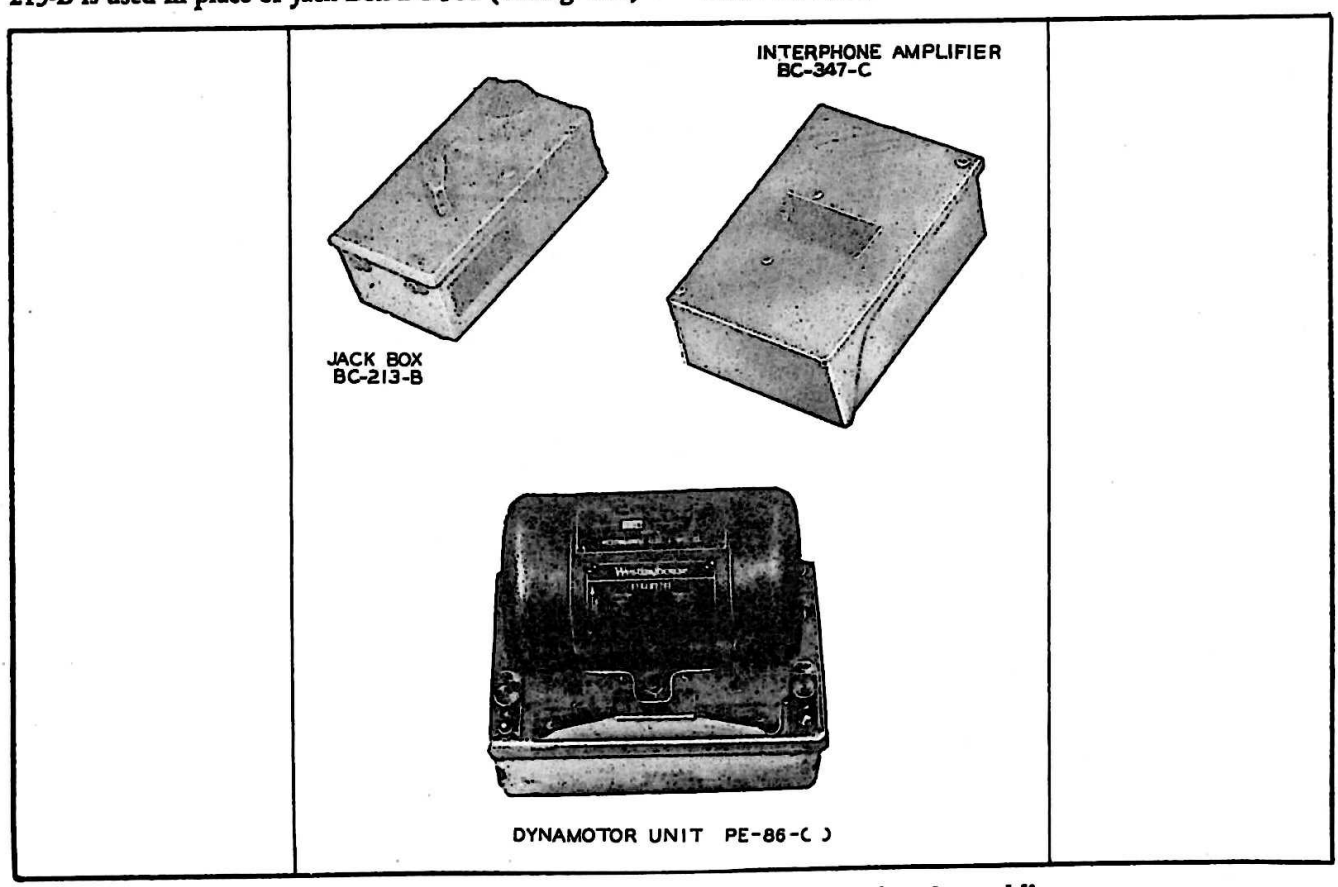

Figure 6-1. Interphone Equipment RC-51—Major Assemblies

SECTION II
INSTALLATION AND ADJUSTMENT

1. PRE-INSTALLATION BENCH TESTS.
Refer to part I, section II, paragraph 1.

2. INSTALLATION.
Refer to part IV, section II, paragraph 2.

3. ADJUSTMENT OF THE OUTPUT TAP.
Refer to part I, section II, paragraph 3.

4. AFTER-INSTALLATION CHECK.

Turn on the interphone equipment and the radio sets associated therewith and check each function of this equipment to make certain that it operates as detailed in section III of this part. Figure 6-3 is a schematic diagram of a typical installation.

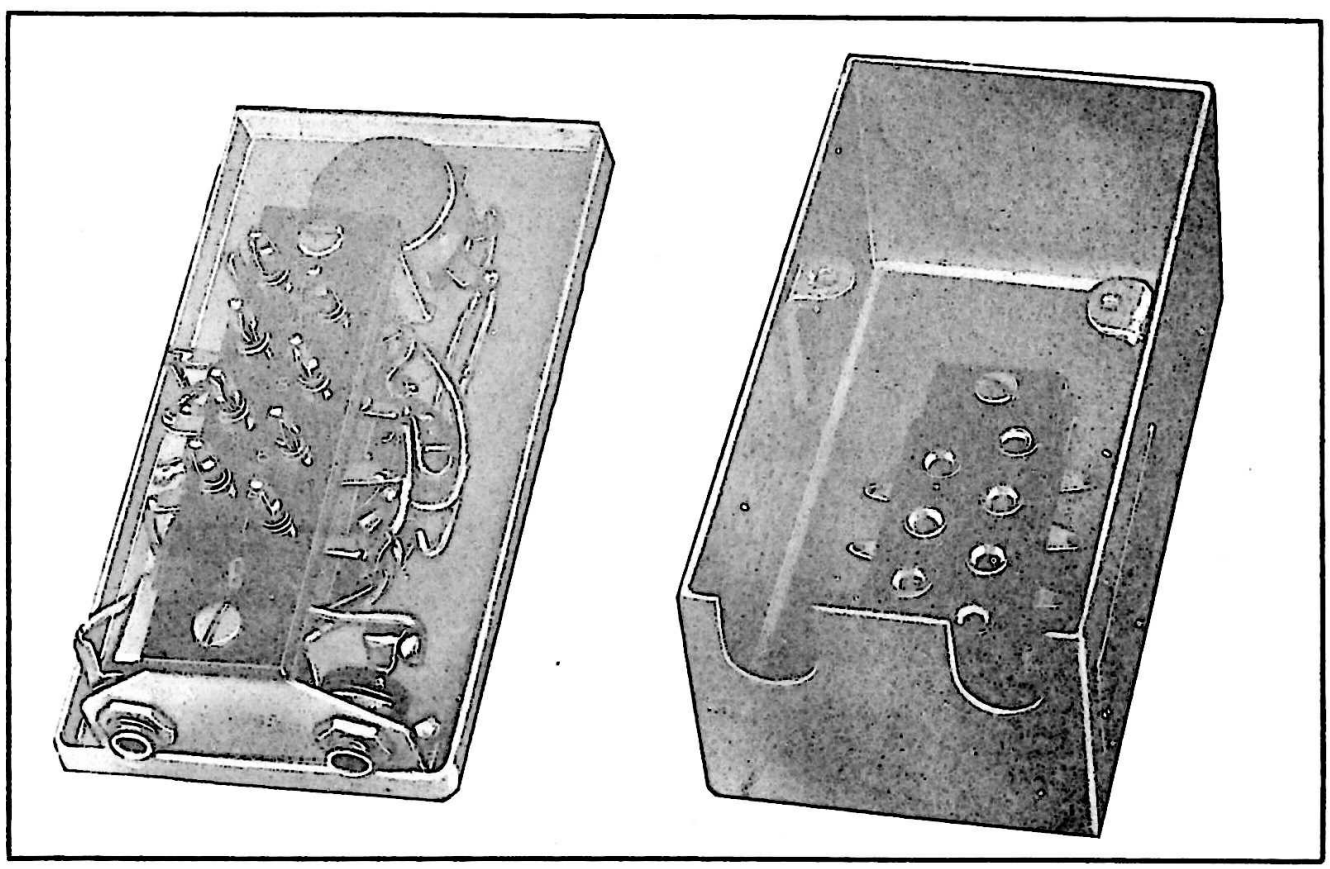

Figure 6-2. Jack Box BC-213-B—Interior View

RESTRICTED
AN 08-40RC175-2

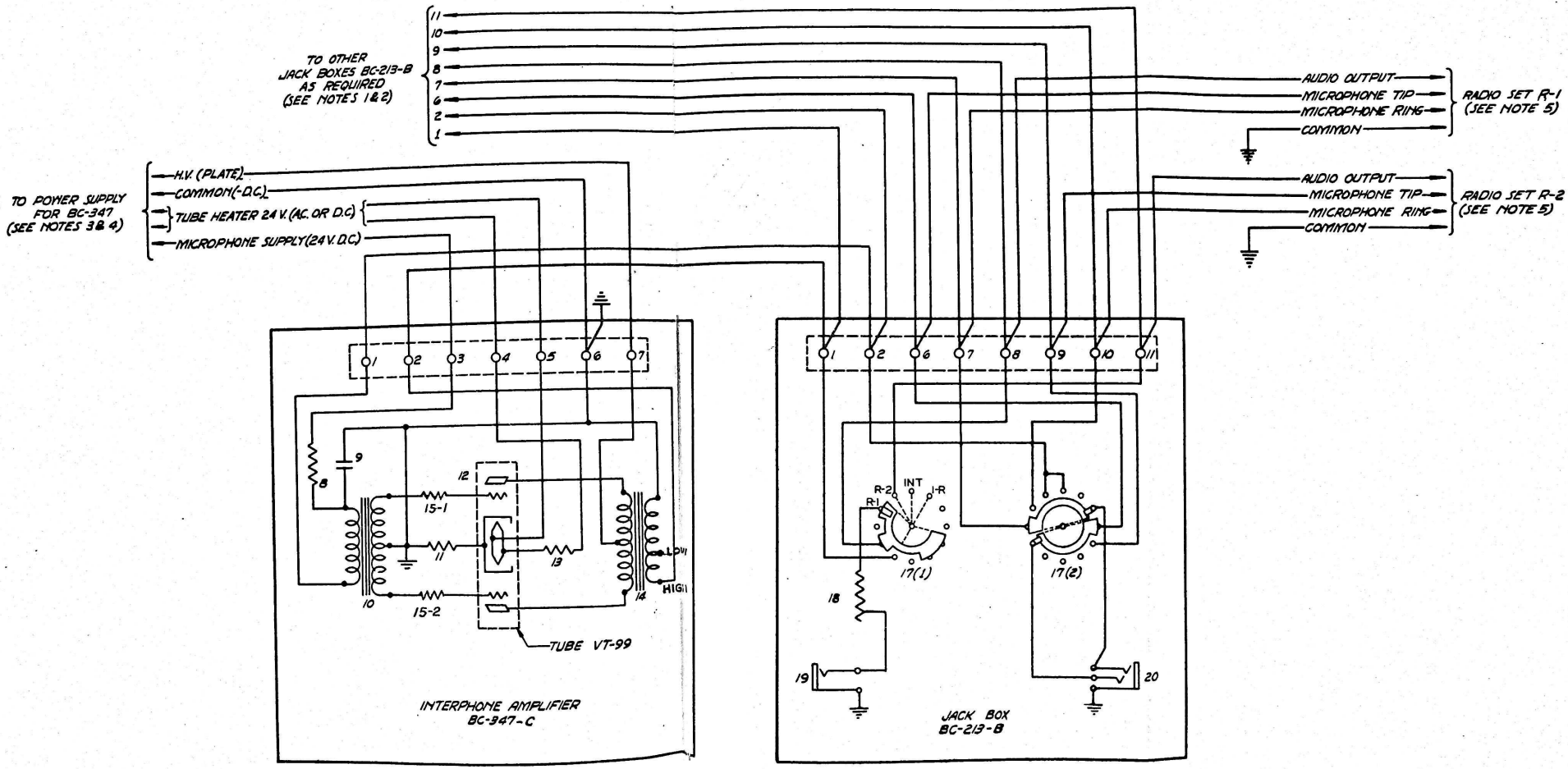

Figure 6-3. Interphone Equipment RC-51—Schematic Wiring Diagram of Typical Installation

SECTION III
OPERATION

1. STARTING AND STOPPING EQUIPMENT.

Refer to part I, section III, paragraph 1.

2. OPERATION FROM THE JACK BOX POSITIONS.

IMPORTANT

In order to insure satisfactory operation of this equipment do not close more than one microphone switch at a time on any individual facility.

When the interphone system and the radio sets associated therewith are properly installed, connected and operating, operation of the various facilities may be obtained in the following manner:

a. "R-1".—To use the radio set connected to channel "R-1" (normally the command radio set) proceed as follows:

(1) Place the selector switch in the "R-1" position. The audio output of the radio receiver connected to R-1 will be heard in the headset.

(2) Adjust the volume control on the jack box for the desired output level. The maximum signal available will depend on the setting of the volume control on the radio receiver.

(3) To transmit on the radio set connected to "R-1," close the microphone switch and speak into the microphone. The transmitter will be modulated and the voice output of the sidetone circuit will be heard in the headset, provided the emission selector switch ("TONE-CW-VOICE" or "VOICE-CW-TONE" switch) on the transmitter is in the "VOICE" position.

b. "R-2."—To use the radio set connected to channel "R-2" (normally either the liaison or compass radio set) proceed as follows:

(1) Place the selector switch in the "R-2" position. The audio output of the radio receiver connected to "R-2" will be heard in the headset.

(2) Adjust the volume control on the jack box for the desired output level. The maximum signal available will depend on the setting of the receiver volume control.

(3) To transmit on the radio set connected to "R-2" close the microphone switch, and speak into the microphone. The transmitter will be modulated and the voice output of the sidetone circuit will be heard in the headset, provided the emission selector switch ("TONE-CW-VOICE" or "VOICE-CW-MCW" switch) on the transmitter is in the "VOICE" position.

NOTE

In some crew positions the "R-2" channel is not wired to permit transmission.

c. INTERPHONE.—To use the interphone circuit proceed as follows:

(1) Place the selector switch on the jack box in the "INT." position. Any voice conversations on the interphone circuit will be heard in the headset.

(2) Adjust the volume control to the desired output level.

(3) To talk on the interphone circuit, close the microphone switch and speak into the microphone.

(4) If the crew member called does not have the selector switch on his jack box in the "INT." position, proceed as detailed in sub-paragraph *d* below.

d. "I-R."—To call a crew member who has the selector switch on his jack box in some position other than "INT" proceed as follows:

(1) Hold the selector switch on the jack box in the "I-R" position.

(2) Close the microphone switch and call the other crew member.

(3) The crew member called should place the selector switch on his jack box in the "INT." position and answer the call, after which the crew member making the call should release the selector switch on his jack box, place the switch on the "INT." position, and continue the conversation on the interphone channel.

IMPORTANT

1. Since the "I-R" (call) facility interrupts the radio channels of all the crew members, it should be used only as a calling circuit.

2. In some installations of Interphone Equipment RC-51 the audio output of the liaison radio set is wired to the headset circuit of the "R-2" channel on the radio operator's jack

box, and the audio output of the compass radio set is wired to the headset circuit of the "R-2" channel of all the other jack boxes. A switch labeled "RADIO OPERATOR'S R-2 POSITION" is located on the liaison radio connector panel. When this switch is open (lower position), the audio output of the liaison radio set is heard in the "R-2" position of the radio-operator's jack box only, and the audio output of the compass radio set is heard in the R-2 position of the other jack boxes. When this switch is closed (upper position), the audio outputs of both the liaison radio set and the compass radio set are heard simultaneously, in the "R-2" position, of all the jack boxes in the airplane.

3. The "INCREASE OUTPUT" control on the jack box should be left at the maximum output settings whenever possible in order that interphone and call signals may be more easily heard.

4. Functional diagrams of headset and microphone circuits for each switch position of Jack Box BC-213-B are shown in figure 6-4.

SECTION IV

THEORY OF OPERATION

Refer to Part I, Section IV

SECTION V

MAINTENANCE

Refer to Part I, Section V

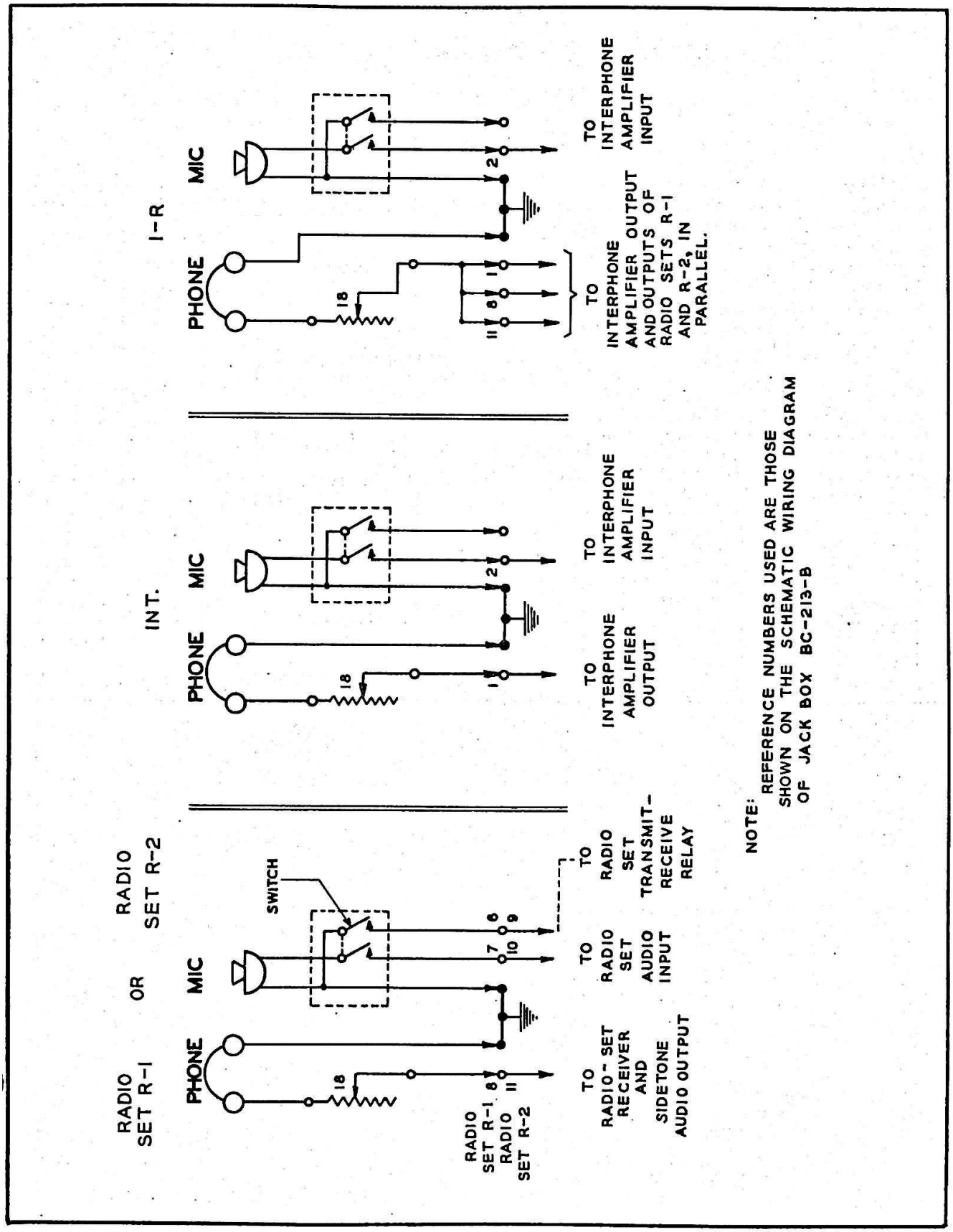

Figure 6-4. Jack Box BC-213-B—Functional Diagrams for All Switch Positions

PART VII

INTERPHONE EQUIPMENT RC-175

SECTION I

GENERAL DESCRIPTION

1. GENERAL.

a. Interphone Equipment RC-175 is a two-place interphone system for use in combat aircraft. It provides interphone communication between the two positions in the airplane, and switching facilities for partial control of one radio set.

b. The power supply requirements for this equipment are the same as those for Interphone Equipment RC-34. (Refer to part I, section I, paragraph 1 *b.*)

2. EQUIPMENT REQUIRED.

Interphone Equipment RC-175 consists of the parts given below. These items may be supplied as part of the interphone equipment, part of the radio set used with this interphone equipment, part of the aircraft installation or separately. (See fig. 7-1.)

Quantity	*Name of Part*	*Overall Dimensions (inches)*	*Weight (in lbs.)*
1	Interphone Amplifier BC-347-C or BC-347-A "Modified" with 1 each tube JAN-(VT-99)	5⅞x4x2⅜	1.5
1*	Dynamotor Unit PE-86-( )	5¼x3½x5	3.6
1‡	Switch SW-195-( )	2 1/16x 11/16x2½	
1	Relay BK-42-( )	2½x1¼x2	
1	Switch; SPST (B-5A)		0.078
1	Switch; DPDT (O-1B)		
2†	Jack JK-26		.05
2#	Jack JK-48		.01
2	Microphone T-30-P, Q, R, S, U or V or Microphone ANB-M-C1 (in an oxygen mask)		.125 .1
2	Headset HS-33 or Headset HS-38 (for flyer's helmet)		.7 or .5
2§	Headset Adapter MC-385-( )		.25
1#	Switch SW-141-( )		.2
2	Terminal Strips		
† //	Cordage CO-119-A or B		.045 per ft.
‡#//	Cordage Co-122-A or B		.042 per ft.
‡#//	Cordage Co-219		.027 per ft.

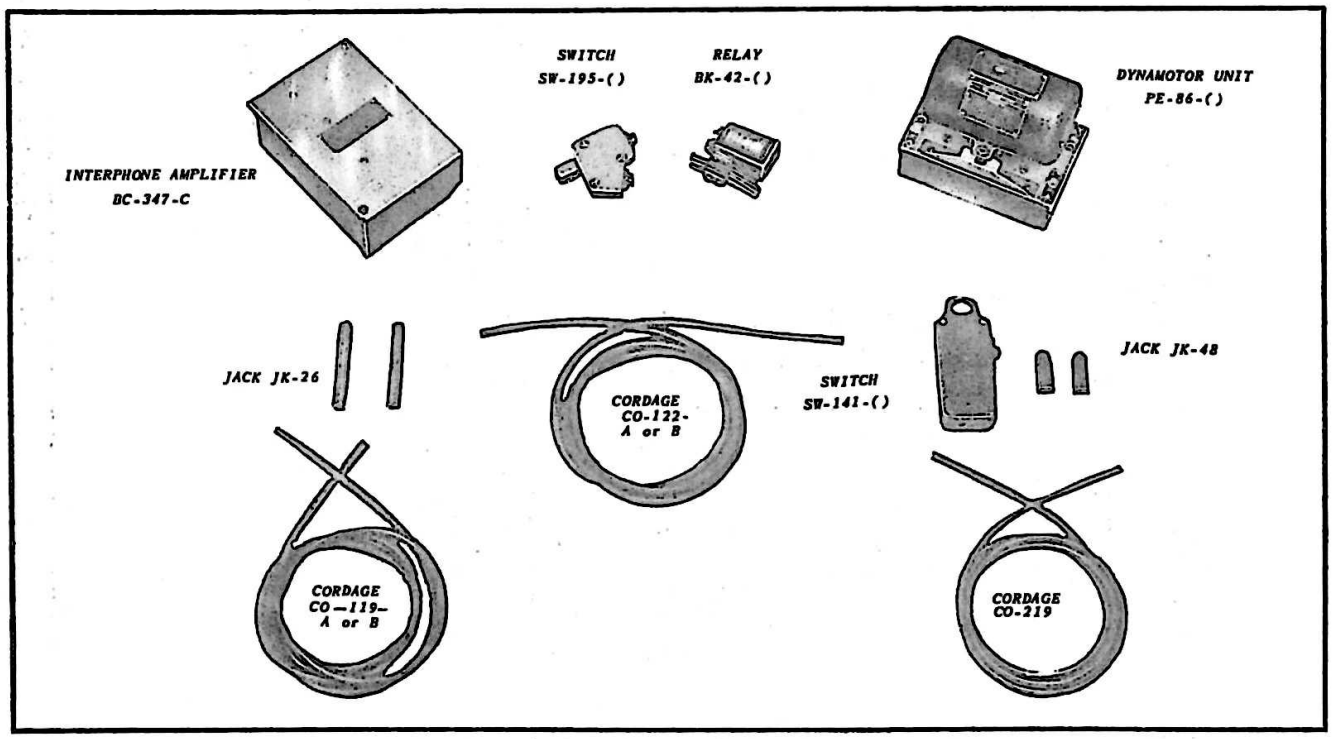

Figure 7-1. Interphone Equipment RC-175—Major Assemblies.

*Any production of the dynamotor unit (PE-86-A thru PE-86-S) may be used.

†A headset extension cord consists of a Jack JK-26 and a length of cordage CO-119-A or B.

‡The microphone extension cord for the pilot's position consists of a Jack JK-48, a length of cordage CO-219, a Switch SW-195-( ), and a length of cordage CO-122-A, CO-122-B.

#The microphone extension cord for the gunner's position consists of a Jack JK-48, a length of cordage CO-219, a Switch SW-141-( ), and a length of cordage CO-122-A.

//The exact length of cordage required depends on the individual aircraft installation.

§Headset Adapter MC-385-C or D only must be used at the pilot's station where Filter Equipment RC-198 is installed. A headset adapter with any suffix letter may be used at the other stations.

3. DESCRIPTION OF MAJOR ASSEMBLIES.

a. GENERAL.—The interphone amplifiers and dynamotors used with this equipment are the same as those used with Interphone Equipment RC-34. (Refer to part I, section I, paragraphs 3 *a* and *b*.)

b. RELAY BK-42-( ).—Relay BK-42-( ) is a double-pole double-throw relay operating from 28.0 volts d-c. The size of the relay is approximately 2½"x1¼"-x 2".

c. SWITCH SW-195-( ).—Switch SW-195-( ) consists of two each, two-circuit to ground, push button switches, housed in a die cast aluminum case. The approximate size of the switch is 2 1/16" x 15/16" x 2½".

4. INTERCHANGEABILITY OF MAJOR ASSEMBLIES.

a. GENERAL.—The interchangeability of the interphone amplifiers, dynamotors and microphones is the same as for Interphone Equipment RC-34. (Refer to part I, section I, par. 4.)

b. RELAY BK-42-( ).—Relays BK-42-A and BK-42-B are interchangeable.

c. SWITCH SW-195-( ).—Switches SW-195-A, -B and -C are directly interchangeable.

d. SWITCH SW-141-( ).—Switches SW-191-A through SW-141-AB are interchangeable.

SECTION II

INSTALLATION AND ADJUSTMENT

1. PRE-INSTALLATION BENCH TESTS.

Refer to part I, section II, paragraph 1.

2. INSTALLATION.

a. PREPARATION FOR INSTALLATION.—*Refer to part I, section II, paragraph 2 a.*

b. LOCATION OF MAJOR ASSEMBLIES.—Install the interphone amplifier and the dynamotor in an accessible location such that the leads to the interphone circuits will be as short as it is convenient to make them. Install the operating controls in a location readily accessible to the using personnel. Install Switch SW-195-( ) on the pilot's throttle.

c. WIRING.—After the interphone amplifier, dynamotor and other components have been mounted in the proper locations, interconnect them with Air Force wire (Specification AN-J-C-48) in compliance with Specification AN-W-14. Wire the circuits in accordance with standard Air Force drawings. Connect all incoming wires for the amplifier to the soldering lugs on the underside of the jack terminal strip. The jack terminal strip is mounted on the bottom of the box and may be removed from the box when making the connections. If audio howl or feedback occurs under any condition, shield all the microphone leads. A schematic of a typical installation is shown in figure 7-2.

d. POWER SUPPLY FOR INTERPHONE AMPLIFIER.—*Refer to part I, section II, paragraph 3 d.*

3. ADJUSTMENT OF OUTPUT TAP (INTERPHONE AMPLIFIER)

Refer to part I, section II, paragraph 3.

4. AFTER-INSTALLATION CHECK.

Turn on the interphone equipment and the radio set associated therewith and check each function of the equipment to make certain that it operates as detailed in section III of this part.

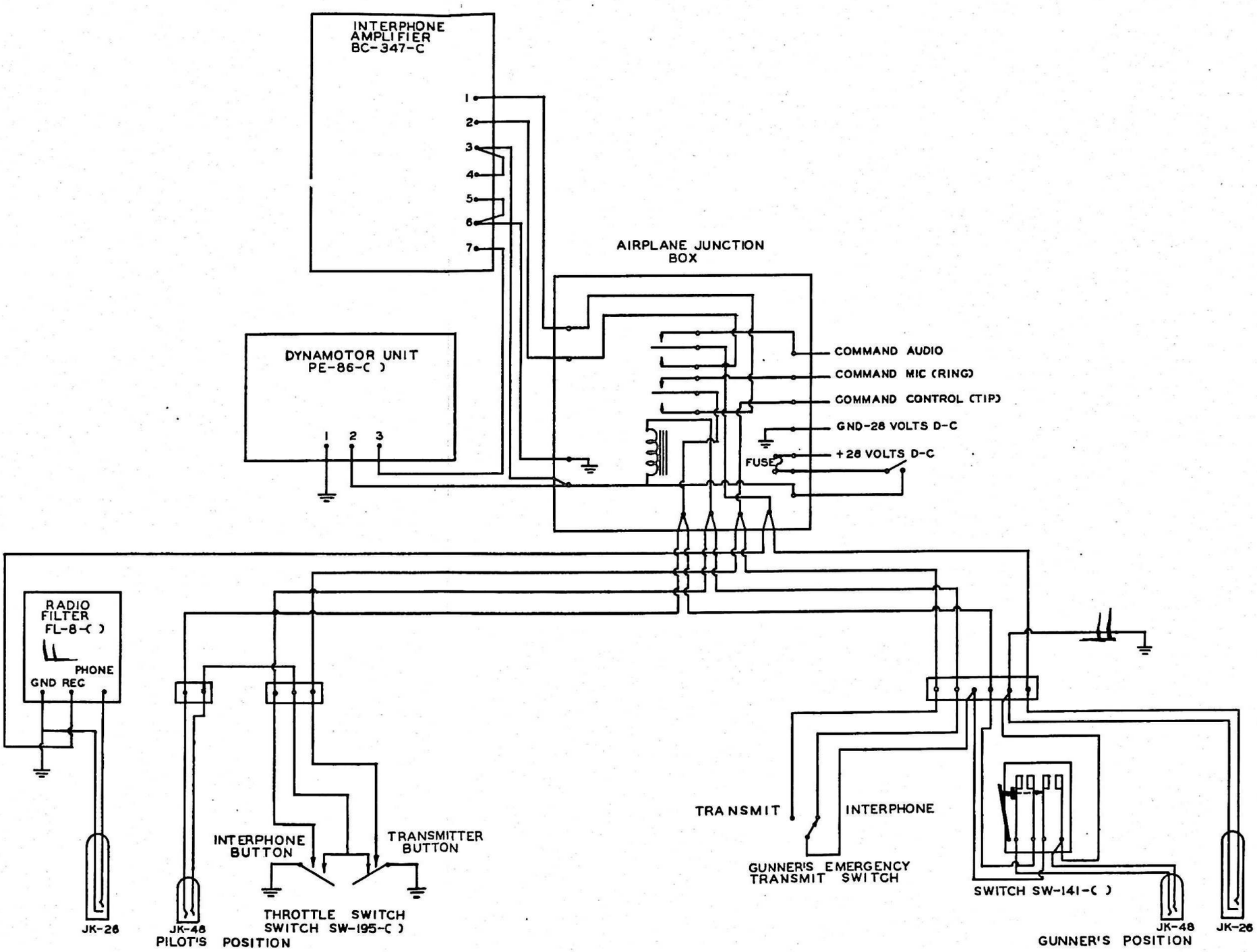

Figure 7-2. Interphone Equipment RC-175—Schematic Wiring Diagram of Typical Installation.

SECTION III
OPERATION

1. STARTING AND STOPPING EQUIPMENT.

a. STARTING.

(1) Turn on airplane battery switch.

(2) Turn on Interphone Power "ON-OFF" switch if installed.

b. STOPPING.

(1) Turn off airplane battery switch.

(2) Turn off Interphone Power "ON-OFF" switch if installed.

2. OPERATION.

IMPORTANT

In order to insure satisfactory operation of this equipment, do not close more than one microphone switch at a time on any individual facility.

When the interphone system and the radio set interconnected therewith are properly installed, connected, and operating, operation of the various facilities may be obtained in the following manner:

a. PILOT'S POSITION.

(1) The output of the radio receiver will be heard in the headset.

(2) Adjust the volume control on the radio receiver to provide the proper level in the headset.

(3) To transmit on the radio set, depress the "TRANSMITTER" button on the throttle switch (Switch SW-195-( ) and speak into the microphone. The transmitter will be modulated, and the voice output of the sidetone circuit will be heard in the headset, provided the emission selector switch ("VOICE-CW-TONE" or TONE-CW-VOICE" switch on the radio control box) is in the "VOICE" position.

(4) To talk on the interphone circuit depress the "INTERPHONE" button on the throttle switch (Switch SW-195-( ) and speak into the microphone. The output of the interphone amplifier will be heard in both the pilot's and gunner's headsets.

b. GUNNER'S POSITION.

(1) The output of the radio receiver will be heard in the headset.

(2) To talk on the interphone circuit close Switch SW-141-( ) and speak into the microphone. The output of the interphone amplifier will be heard in the headsets.

3. To transmit on the radio set (in cases of emergency only). Place the "GUNNERS EMERGENCY TRANSMIT" switch in the "TRANSMIT" position, close Switch SW-141-( ) and speak into the microphone. The transmitter will be modulated and the voice output of the sidetone circuit will be heard in the headset, provided that the emission selector switch ("VOICE-CW-TONE" or "TONE-CW-VOICE" switch on the radio control box) is in the "VOICE" position.

IMPORTANT

Under normal conditions of operation the "GUNNERS' EMERGENCY TRANSMIT" switch should be left in the "INTERPHONE" position.

SECTION IV
THEORY OF OPERATION

Refer to Part I, Section IV

SECTION V
MAINTENANCE

Refer to Part I, Section V

PART VIII
APPENDIX
SECTION I
MICROPHONES

1. THROAT MICROPHONE.

a. Care must be taken in the use of this type of microphone in order to obtain satisfactory communication. For best results, place the microphone elements so that they are equally spaced on either side of, and just above, the thyroid cartilage (Adam's apple). Care should be exercised to insure that the microphone elements do not fall below the Adam's apple as this will result in a loss in transmission from the throat microphone.

b. The neck-band's length should be adjusted to permit the microphone elements to bear firmly but not too tightly against the throat, in order that the black plastic caps, the vibration-sensitive surfaces, are always in contact with the skin of the neck. Best results are obtained when the microphone feels reasonably comfortable to the wearer and is neither too loose nor too tight. For best results, the entire area of the plastic face of each microphone element must be in contact with the neck. A properly adjusted microphone makes it unnecessary for the user to employ his hands to hold the microphone elements in intimate contact with his neck.

c. While the performance of the microphone is not appreciably affected by contact with clothing of the user, it is important that the clothing does not get between the microphone elements and the skin.

d. Certain precautions must be taken in using any type of microphone in order to insure intelligibility; this is especially true when throat microphones are used. One should speak as distinctly as possible. Hurried speech often leads to misunderstanding or requires that the message be repeated. Reasonably slow, clear, distinct speech is essential for good communication in aircraft. The speech reproduced by a throat-type microphone will not sound as natural as that from other standard types of microphones because of the inherent differences between speech sounds picked up from the throat and those emitted from the mouth. However, speech from a throat microphone can be intelligible if suitable precautions in line with the above comments are taken, and if the equipment with which the microphone is used is properly installed, operated and maintained.

e. Some personnel will be unable to use a throat-type microphone because their particular voice and neck characteristics are not suitable; they should obtain another type of microphone for their particular use.

2. MASK MICROPHONE.

Microphone ANB-M-C1 is a carbon type microphone designed for use in oxygen masks. It consists of Microphone Unit MC-254-A, Microphone Cover M-369, and a short length of Cordage CO-219 which connects the microphone unit to Plug PL-291. This microphone is directly interchangeable with the Microphone T-30 type and will provide much better performance than the throat type microphone. Mocrophone Cover M-369 is used to prevent the accumulation of moisture on and within the microphone units; replacement of this cover is required when it becomes ragged, worn or torn.

3. PREPARATION OF MICROPHONE EXTENSION CORD.

If the microphone extension cord used is to consist of a Jack JK-48, a length of Cordage CO-219, a Microphone Switch SA-26/U, a length of Cordage CO-122-A or CO-122-B and a Plug PL-68, assemble the cord in the following manner:

a. Strip away the jacket of the cordages at each end a sufficient length to allow for making the necessary connections. Care must be taken not to cut or damage the insulation on the individual conductor nor to disturb the lay of the wires at the ends of the jackets.

b. Solder the leads on one end of Cordage CO-219 to the pin jacks of Jack JK-48.

c. To assemble Jack JK-48, place a piece of ½ inch thick felt in a metal container having a flat bottom, and fill the container with butyl acetate up to one half the thickness of the felt pad. Place the two halves of the shell for Jack JK-48 on the felt pad inside face down and press them lightly. Remove one shell from the pad after 15 to 30 seconds and place the pin jacks in this shell. After 30 to 60 seconds, remove the second half of the shell from the felt pad and assemble it to the first half. Place the entire assembly in a clamping fixture and apply suitable pressure for 15 to 30 minutes, in order to securely bond the assembly together. Buff and polish or otherwise remove rough edges after bonding is complete.

NOTE

The time intervals given above are only approximate; they must be controlled in such a manner as to insure a complete and secure assembly. The use of solvents or softening agents other than butyl acetate or cordages other than Cordage CO-219 will be unsatisfactory.

d. Remove the cordage clamp from the switch case.

e. Pull the other end of Cordage CO-219 through the cordage hole in the case for Microphone Switch SA-26/U and through the switch mounting hole in the bracket used to assemble the switch to the gun mount, or other point of location. Solder proper terminals to

both conductors. Connect the white conductor to terminal X and the black conductor to terminal 1 of the switch.

f. Pull end of Cordage CO-122-A or CO-122-B through the cordage hole in the switch case and through the hole in the bracket, and connect the red conductor of the cordage to terminal X, the white conductor to terminal 2, and the black conductor to terminal G of the switch.

g. Assemble the switch and case to the mounting bracket and tighten securely. Holding the switch fixed, thread the case on to the switch until one of the notches in the switch case engages with the punched lug on the mounting bracket. Then secure the assembly by tightening the hexagonally-headed portion of the switch. Turn the cords in the case at the time the switch is being rotated in tightening.

h. Place the cordage clamp on the switch case and clamp the cords by securely tightening the screw. Properly clamped cords will require at least a 12-pound force to pull the cords out of the switch case.

i. Slip the plug shell for Plug PL-68 onto the cord or cordage.

j. Connect the other end of Cordage CO-122-A or CO-122-B to a Plug PL-68; connect the white conductor to the tip, the red conductor to the ring, and the black conductor to the sleeve.

k. Clamp or serve the cordage securely to the plug and thread shell tightly onto plug. Cordage properly clamped or served will require at least a 12-pound force to pull the cordage from the plug.

l. Test cord for shorts and continuity.

4. PREPARATION OF CORD CD-307-A (HEADSET EXTENSION).

Cord CD-307-A consists of a Plug PL-55, a length of Cordage CO-119-A or CO-119-B and a Jack JK-26. Assemble the cord in the following manner:

a. Strip the jacket of the cordage a sufficient length to allow for making the necessary connection. Care must be taken not to cut or damage the insulation on the individual conductors nor to disturb the lay of the wires at the ends of the jacket.

b. Slip the shells for the plug and jack onto the cordage.

c. Solder terminals to both conductors on each end. Terminals are furnished assembled to the plug and jack.

d. Connect one end of the cordage to Plug PL-55 and the other end to Jack JK-26. In wiring Cordage CO-119-A or CO-119-B to Plug PL-55, connect the white conductor to the tip and the black conductor to the sleeve. In wiring Cordage CO-119-A or CO-119-B to Jack JK-26, connect the white conductor to the contact spring and the black conductor to the sleeve.

e. Clamp or serve the cordage to the plug and to the jack, and assemble proper shells on the plug and jack. Cordage properly clamped or served will require at least a 12-pound force to pull the cordage from the plug or jack.

f. Test cord for shorts and continuity with an ohmmeter.